LOT 5
NORTH DEERWOOD EST PB 6/173

HIGGS LORRI A
45196 AMERICAN DREAM DR
CALLAHAN, FL 32011

2024

22-2N-25-1460-0005-0000

BUILDING CHARACTERISTICS

ELEMENT	CD	CONSTRUCTION
Exterior Wall	20	FACE BRICK 100
Roof Structur	03	GABLE/HIP 100
Roof Cover	03	COMP SHNGL 100
Interior Wall	05	DRYWALL 100
Interior Floo	13	LVT/LAMNT 90
Interior Floo	15	HARDTILE 10
Air Condition	03	CENTRAL 100
Heating Type	04	AIR DUCTED 100
Bedrooms		3 100
Bathrooms		2.5 100
Frame	02	WOOD FRAME 100
Stories	1.	1. 100
Units		0 100
Quality	05	Quality Level 05
DOR CODE	0100	SINGLE FAMILY
MAP NUM		MKT AREA 08
NEIGHBORHOOD/LOC	8018.00	

AREA TYPE	TOTAL GROSS AREA	PCT OF BASE	TOT ADJ AREA	SUBAREA MARKET VALUE
BAS	2,175	100	2,175	321,835
FGR	880	55	484	71,617
FOP	80	30	24	3,551
FSP	238	40	95	14,057
PTO	88	5	4	592
TOTALS	3,461		2,782	411,653

MARKET ADJUSTMENTS

TYPE	MDL	EFF. AREA	TOT ADJ PTS	EFF. BASE RATE	REPL. COST NEW	AYB	EYB	ECON	FNCT		NORM	% COND
0900	01	2,782	118.3776	147.97	411,653	2023	2023	0	0	0	0.00	100.00

1 SNGL FAM – 100% - 2024 Heated Area: 2175 HX Base Yr 2024

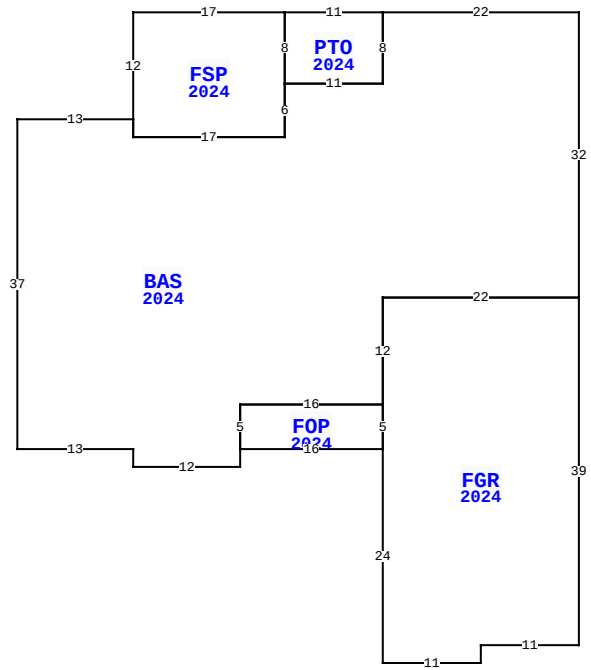

45196 AMERICAN DREAM DR, CALLAHAN

BLD DATE		LGL DATE	
XF DATE		LAND DATE	
INC DATE		AG DATE	

NASSAU COUNTY PROPERTY

PAGE 1 of 1 6

VALUATION SUMMARY

VALUATION BY		STANDARD
Tax Group: 6	Tax Dist:	
BUILDING MARKET VALUE		411,653
TOTAL MARKET OB/XF VALUE		14,588
TOTAL LAND VALUE - MARKET		60,000
TOTAL MARKET VALUE		486,241
SOH/AGL Deduction		122,948
ASSESSED VALUE		363,293
TOTAL EXEMPTION VALUE	HX HB	50,000
BASE TAXABLE VALUE		313,293
TOTAL JUST VALUE		486,241
NCON VALUE		426,241
INCOME VALUE		
PREVIOUS YEAR MKT VALUE		60,000

PRMT:1:1: HTD 2156/ FGR 884/ FOP 411

PERMIT NUM	DESCRIPTION	AMT	ISSUED
C2217397	CO		07/05/2023
B2217397	NEW CONSTR	427,838	11/23/2022

SALES DATA

OFF RECORD Number	DATE	TYPE INST	Q U	V I	RSN CD	SALE PRICE
2512/1649	10/29/2021	SW	Q	V	01	70,000
GRANTOR: U Y PROPERTIES LLC						
GRANTEE: HIGGS ASA A & LORRI						
1634/0724	8/06/2009	WD	U	I	11	100
GRANTOR: TOY GEORGETTE						
GRANTEE: U Y PROPERTIES LLC						

BUILDING NOTES

EXTRA FEATURES

L N	OB/XF CODE	DESCRIPTION	BLD	CAP	L	W	UNITS	UT	Adj R	ADJ UNIT PRICE	ORIG COND	YEAR ON	YEAR ACTUAL	Q	% COND	OB/XF MKT VALUE	NOTES
1	0500	FP-PRE FAB	0	100	0	0	1.00	UT	3,500.00	3,500.00	100	2024	2023		100	3,500	
2	0812	CONCRETE C	0	100	0	0	2,772.00	SF	4.00	4.00	100	2024	2023		100	11,088	

BUILDING DIMENSIONS

BAS=[YR=2024;ORIG=80,0] W22 S8 W11 S6 W17 N2 W13 S37 E13 S2 E12 N2 N5 E16 N12 E22 N32 $
PTO=[YR=2024;ORIG=58,8] W11 N8 E11 S8 $
FSP=[YR=2024;ORIG=30,0] E17 S8 S6 W17 N2 N12 $
FOP=[YR=2024;ORIG=42,44] E16 S5 W16 N5 $
FGR=[YR=2024;ORIG=58,32] E22 S39 W11 S2 W11 N24 N5 N12 $
.

LAND DESCRIPTION

TOTAL OB/XF 14,588

L N	USE CODE	CLS	LAND USE DESCRIPTION	CAP	R D	LOC ZONE	FRONT	DEPTH	TOT LND UTS	UNIT TYPE	D T	DPTH FACT	% COND	TOT ADJ	UNIT PRICE	ADJ UNIT PRICE	LAND VALUE	OTHER ADJUSTMENTS AND NOTES	YEAR	DENSITY	DECL	FRZ	YR	CONSRV
1	000100	C	SFR	100		OR	0.00	0.00	1.00	LT		1.00	1.00	1.00	60,000.00	60,000.00	60,000							

REVIEW DATE 07/25/2023 BY KW Total Acres: 0.00 Total Land Value: 60,000 Market: 0 Agricultural: 0 Common: 60,000 PRINTED 08/06/2024 BY SYS