LOT 4
NORTH DEERWOOD EST PB 6/173

BRENNAN CHRISTIAN & DIANA
45176 AMERICAN DREAM DRIVE
CALLAHAN, FL 32011

2024

22-2N-25-1460-0004-0000

BUILDING CHARACTERISTICS

ELEMENT	CD	CONSTRUCTION
Exterior Wall	20	FACE BRICK 50
Exterior Wall	30	VINYL 50
Roof Structur	03	GABLE/HIP 100
Roof Cover	03	COMP SHNGL 100
Interior Wall	05	DRYWALL 100
Interior Floo	13	LVT/LAMNT 70
Interior Floo	11	CLAY TILE 30
Air Condition	03	CENTRAL 100
Heating Type	04	AIR DUCTED 100
Bedrooms		4 100
Bathrooms		3.5 100
Frame	02	WOOD FRAME 100
Stories	2.	2. 100
Units		0 100
Occupancy	00	NONE 100
Quality	05	Quality Level 05
DOR CODE	0100	SINGLE FAMILY
MAP NUM		MKT AREA 08
NEIGHBORHOOD/LOC	8018.00	

AREA TYPE	TOTAL GROSS AREA	PCT OF BASE	TOT ADJ AREA	SUBAREA MARKET VALUE
BAS	1,183	100	1,183	151,280
BAS	850	100	850	108,697
FGR	581	55	320	40,921
FOP	48	30	14	1,791
FUS	965	100	965	123,403
UOP	180	20	36	4,604
UOP	316	20	63	8,056
TOTALS	4,123		3,431	438,752

MARKET ADJUSTMENTS

TYPE	MDL	EFF. AREA	TOT ADJ PTS	EFF. BASE RATE	REPL. COST NEW	AYB	EYB	ECON	FNCT		NORM	% COND
0900	01	3,431	114.1536	142.69	489,569	2001	2006	0	0	0	10.38	89.62

1 SNGL FAM – 100% - 2022 Heated Area: 2998 HX Base Yr 2022

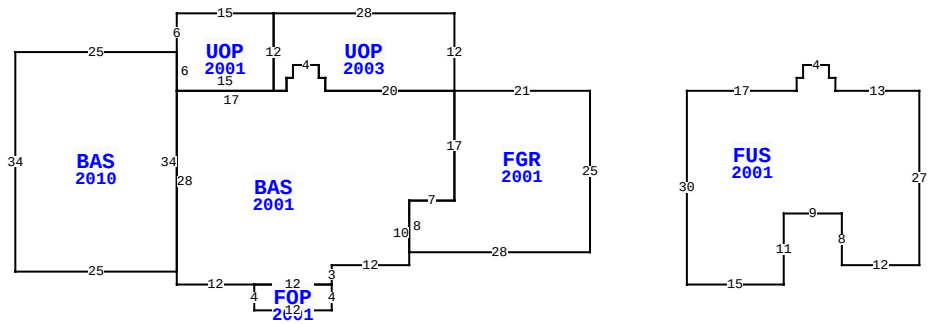

45176 AMERICAN DREAM DR, CALLAHAN

BLD DATE		LGL DATE	
XF DATE		LAND DATE	
INC DATE		AG DATE	

NASSAU COUNTY PROPERTY

VALUATION SUMMARY

VALUATION BY		STANDARD
Tax Group: 6	Tax Dist:	
BUILDING MARKET VALUE		459,975
TOTAL MARKET OB/XF VALUE		58,330
TOTAL LAND VALUE - MARKET		60,000
TOTAL MARKET VALUE		578,305
SOH/AGL Deduction		129,736
ASSESSED VALUE		448,569
TOTAL EXEMPTION VALUE	HX HB	50,000
BASE TAXABLE VALUE		398,569
TOTAL JUST VALUE		578,305
NCON VALUE		0
INCOME VALUE		
PREVIOUS YEAR MKT VALUE		540,662

PERMIT NUM	DESCRIPTION	AMT	ISSUED
G01526	GAS	3,000	05/01/2010
E22332	ELEC OTHER	0	01/01/2010
B23031	ADDITION	55,902	11/01/2009
R12189	REPAIR/RRF	2,000	11/01/2009
R12190	REPAIR/RRF	1,000	11/01/2009
M14942	H/AC	0	11/01/2009

SALES DATA

OFF RECORD Number	DATE	TYPE INST	Q / U	V / I	RSN CD	SALE PRICE
2455/0716	4/20/2021	WD	Q	I	01	520,000
GRANTOR: TOY GEORGETTE C & BLA						
GRANTEE: BRENNAN CHRISTIAN &						
1280/1197	12/13/2004	CT	U	I	14	184,700
GRANTOR: CLERK OF COURT						
GRANTEE: TOY GEORGETTE C & S						

BUILDING NOTES

BUILDING DIMENSIONS

FGR=[YR=2001] W21 UOP=[YR=2003] N12 W28 UOP=[YR=2001] W15 S6 BAS=[YR=2010] W25 S34 E25 BAS=[YR=2001] S2 E12 FOP=[YR=2001] S4 E12 N4 W12 $ E12 N3 E12 N10 E7 N17 W20 N2 W1 N2 W4 S2 W1 S2 W17 S28$ N34$ S6 E15 N12$ S12 E2 N2 E1 N2 E4 S2 E1 S2 E20$S17 W7 S8 E28 N25 $ PTR= E15 FUS=[YR=2001] E17 N2 E1 N2 E4 S2E1 S2 E13 S27 W12 N8 W9 S11 W15 N30 $ W15 $.

EXTRA FEATURES

LN	OB/XF CODE	DESCRIPTION	BLD	CAP	L	W	UNITS	UT	Adj R	ADJ UNIT PRICE	ORIG COND	YEAR ON	YEAR ACTUAL	Q	% COND	OB/XF MKT VALUE	NOTES
1	0500	FP-PRE FAB	0	100	0	0	1.00	UT	3,500.00	3,500.00	100	2001	2001	3	85	2,975	
2	0812	CONCRETE C	0	100	0	0	1,878.00	SF	4.00	4.00	100	2001	2001	3	80	6,010	
3	0810	CONCRETE A	0	100	0	0	309.00	SF	6.50	6.50	100	2003	2003	3	83	1,667	
4	0861	POOL GUNIT	0	100	0	0	476.00	SF	85.00	85.00	100	2003	2003	3	32	12,947	
5	0845	KOOL DECK	0	100	0	0	470.00	SF	7.25	7.25	100	2003	2003	3	83	2,828	
6	0845	KOOL DECK	0	100	0	0	1,808.00	SF	7.25	7.25	100	2010	2010	3	91	11,928	
7	0474	VF 4 RAIL	0	100	8	128	1,024.00	LF	9.25	9.25	100	2010	2010	3	78	7,388	
8	0476	VF 6 SBPL	0	100	31	6	186.00	LF	32.00	32.00	100	2010	2010	3	78	4,643	
9	0470	VNYL GATE	0	100	0	0	1.00	UT	300.00	300.00	100	2010	2010	3	78	234	
10	0462	ST/AL FNC	0	100	0	0	576.00	SF	10.00	10.00	100	2010	2010	3	60	3,456	

TOTAL OB/XF 54,076

LAND DESCRIPTION

LN	USE CODE	CLS	LAND USE DESCRIPTION	CAP	RD	LOC ZONE	FRONT	DEPTH	TOT LND UTS	UNIT TYPE	DT	DPTH FACT	% COND	TOT ADJ	UNIT PRICE	ADJ UNIT PRICE	LAND VALUE	OTHER ADJUSTMENTS AND NOTES	YEAR	DENSITY	DECL	FRZ	YR	CONSRV
1	000100	C	SFR	100		OR	0.00	0.00	1.00	LT		1.00	1.00	1.00	60,000.00	60,000.00	60,000							

REVIEW DATE 05/18/2020 BY KBA Total Acres: 0.00 Total Land Value: 60,000 Market: 0 Agricultural: 0 Common: 60,000 PRINTED 08/06/2024 BY SYS

LOT 4
NORTH DEERWOOD EST PB 6/173

BRENNAN CHRISTIAN & DIANA
45176 AMERICAN DREAM DRIVE
CALLAHAN, FL 32011

2024

22-2N-25-1460-0004-0000

BUILDING CHARACTERISTICS

ELEMENT	CD	CONSTRUCTION
Exterior Wall	05	AVERAGE 50
Exterior Wall	20	FACE BRICK 50
Roof Structur	03	GABLE/HIP 100
Roof Cover	03	COMP SHNGL 100
Interior Wall	07	NONE 100
Interior Floo	03	CONC FINSH 100
Air Condition	01	NONE 100
Heating Type	01	NONE 100
Bedrooms		0 100
Bathrooms		0 100
Frame	02	WOOD FRAME 100
Stories	0	0 100
Units		0 100
Occupancy	00	NONE 100
Quality	06	Quality Level 06

DOR CODE	0100	SINGLE FAMILY	
MAP NUM		MKT AREA	08
NEIGHBORHOOD/LOC	8018.00		

AREA TYPE	TOTAL GROSS AREA	PCT OF BASE	TOT ADJ AREA	SUBAREA MARKET VALUE
BAS	1,150	100	1,150	21,223
TOTALS	1,150		1,150	21,223

MARKET ADJUSTMENTS

TYPE	MDL	EFF. AREA	TOT ADJ PTS	EFF. BASE RATE	REPL. COST NEW	AYB	EYB	ECON	FNCT		NORM	% COND
6500	01	1,150	62.7785	21.97	25,266	2010	2010	0	0	0	16.00	84.00

2 GARAGE RES – 100% - 2022 Heated Area: 1150 HX Base Yr 2022

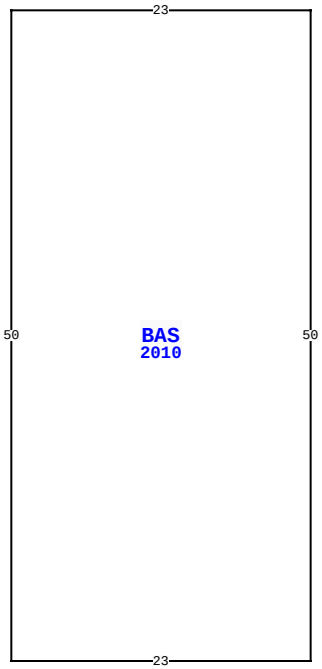

45176 AMERICAN DREAM DR, CALLAHAN

BLD DATE		LGL DATE	
XF DATE		LAND DATE	
INC DATE		AG DATE	

NASSAU COUNTY PROPERTY

PAGE 2 of 2 6

VALUATION SUMMARY

VALUATION BY		STANDARD
Tax Group: 6	Tax Dist:	
BUILDING MARKET VALUE		459,975
TOTAL MARKET OB/XF VALUE		58,330
TOTAL LAND VALUE - MARKET		60,000
TOTAL MARKET VALUE		578,305
SOH/AGL Deduction		129,736
ASSESSED VALUE		448,569
TOTAL EXEMPTION VALUE	HX HB	50,000
BASE TAXABLE VALUE		398,569
TOTAL JUST VALUE		578,305
NCON VALUE		0
INCOME VALUE		
PREVIOUS YEAR MKT VALUE		540,662

PERMIT NUM	DESCRIPTION	AMT	ISSUED
B	SWIM POOL	0	02/01/2003
B10720	XFOB	11,181	02/01/2003
B018553	NEW CONSTR	98,543	07/01/2001

SALES DATA

OFF RECORD Number	DATE	TYPE INST	Q / U	V / I	RSN CD	SALE PRICE
2455/0716	4/20/2021	WD	Q	I	01	520,000
GRANTOR: TOY GEORGETTE C & BLA						
GRANTEE: BRENNAN CHRISTIAN &						
1280/1197	12/13/2004	CT	U	I	14	184,700
GRANTOR: CLERK OF COURT						
GRANTEE: TOY GEORGETTE C & S						

BUILDING NOTES

BUILDING DIMENSIONS

BAS=[YR=2010] W23 S50 E23 N50$.

EXTRA FEATURES

LN	OB/XF CODE	DESCRIPTION	BLD	CAP	L	W	UNITS	UT	Adj R	ADJ UNIT PRICE	ORIG COND	YEAR ON	YEAR ACTUAL	Q	% COND	OB/XF MKT VALUE	NOTES
11	0463	FENCE GATE	0	100	0	0	2.00	UT	300.00	300.00	100	2010	2010	3	78	468	
12	0812	CONCRETE C	0	100	0	0	1,040.00	SF	4.00	4.00	100	2010	2010	3	91	3,786	

LAND DESCRIPTION

TOTAL OB/XF 4,254

LN	USE CODE	CLS	LAND USE DESCRIPTION	CAP	RD	LOC ZONE	FRONT	DEPTH	TOT LND UTS	UNIT TYPE	DT	DPTH FACT	% COND	TOT ADJ	UNIT PRICE	ADJ UNIT PRICE	LAND VALUE	OTHER ADJUSTMENTS AND NOTES	YEAR	DENSITY	DECL	FRZ	YR	CONSRV

REVIEW DATE 05/18/2020 BY KBA Total Acres: 0.00 Total Land Value: 60,000 Market: 0 Agricultural: 0 Common: 60,000 PRINTED 08/06/2024 BY SYS