LOT 4 W OF ROAD
IN OR 2443/400

MOODY GARRETT & ANNA
307 MILLER ST
ST MARYS, GA 31558

2024

21-4N-24-0000-0004-0000

NASSAU COUNTY PROPERTY

BUILDING CHARACTERISTICS

ELEMENT	CD	CONSTRUCTION
Exterior Wall	05	AVERAGE 100
Roof Structur	03	GABLE/HIP 100
Roof Cover	01	MINIMUM 100
Interior Wall	02	WALL BD/WD 100
Interior Floo	09	PINE WOOD 100
Air Condition	03	CENTRAL 100
Heating Type	04	AIR DUCTED 100
Bedrooms		2 100
Bathrooms		1 100
Frame	02	WOOD FRAME 100
Stories	1.	1. 100
Units		0 100
BUD8 Adjustme	04	DIST 01 100
Occupancy	00	NONE 100

Quality	03	Quality Level 03
DOR CODE	0100	SINGLE FAMILY
MAP NUM		MKT AREA 09
NEIGHBORHOOD/LOC	9001.00	

AREA TYPE	TOTAL GROSS AREA	PCT OF BASE	TOT ADJ AREA	SUBAREA MARKET VALUE
BAS	1,056	100	1,056	73,577
FEP	288	80	230	16,025
TOTALS	1,344		1,286	89,602

MARKET ADJUSTMENTS

TYPE	MDL	EFF. AREA	TOT ADJ PTS	EFF. BASE RATE	REPL. COST NEW	AYB	EYB	ECON	FNCT		NORM	% COND
0100	01	1,286	89.4400	84.97	109,271	1944	1980	0	0	0	18.00	82.00

1 SINGLE FAM – 0% - 0 Heated Area: 1056 HX Base Yr

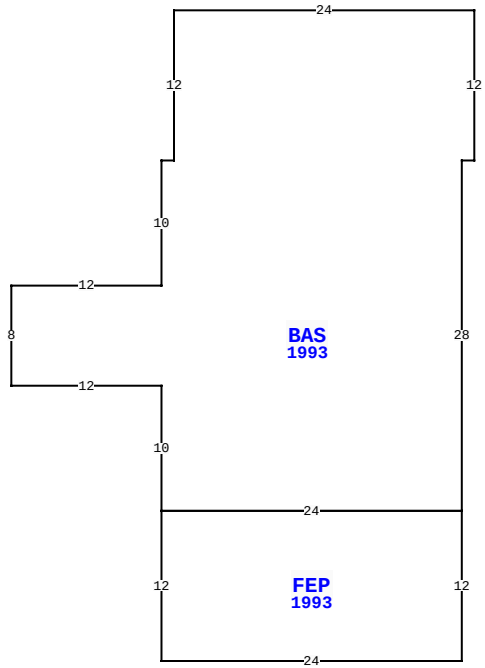

273008 MURRHEE RD, HILLIARD

BLD DATE		LGL DATE	
XF DATE		LAND DATE	06/13/2023 MLU
INC DATE		AG DATE	

VALUATION SUMMARY

VALUATION BY	STANDARD
Tax Group: 4	Tax Dist:
BUILDING MARKET VALUE	89,602
TOTAL MARKET OB/XF VALUE	792
TOTAL LAND VALUE - MARKET	30,000
TOTAL MARKET VALUE	120,394
SOH/AGL Deduction	0
ASSESSED VALUE	120,394
TOTAL EXEMPTION VALUE	0
BASE TAXABLE VALUE	120,394
TOTAL JUST VALUE	120,394
NCON VALUE	0
INCOME VALUE	
PREVIOUS YEAR MKT VALUE	116,208

PERMIT NUM	DESCRIPTION	AMT	ISSUED

SALES DATA

OFF RECORD Number	DATE	TYPE INST	Q / U	V / I	RSN CD	SALE PRICE
2443/0400	2/28/2021	WD	U	I	37	15,000
GRANTOR: CONNER EMILY D						
GRANTEE: MOODY GARRETT & ANN						
1466/0480	12/18/2006	WD	U	I	01	100
GRANTOR: CONNER EMILY D						
GRANTEE: VANZANT MARY K ETAL						

BUILDING NOTES

BUILDING DIMENSIONS

BAS=[YR=1993] W24 S12 W1 S10 W12 S8 E12 S10 FEP=[YR=1993] S12 E24 N12 W24 $ E24 N28 E1 N12 $.

EXTRA FEATURES

LN	OB/XF CODE	DESCRIPTION	BLD	CAP	L	W	UNITS	UT	Adj R	ADJ UNIT PRICE	ORIG COND	YEAR ON	YEAR ACTUAL	Q	% COND	OB/XF MKT VALUE	NOTES
1	0479	VF PICKET	0	0	0	0	120.00	LF	10.00	10.00	100	2005	2005	3	66	792	

LAND DESCRIPTION

TOTAL OB/XF 792

LN	USE CODE	CLS	LAND USE DESCRIPTION	CAP	RD	LOC ZONE	FRONT	DEPTH	TOT LND UTS	UNIT TYPE	DT	DPTH FACT	% COND	TOT ADJ	UNIT PRICE	ADJ UNIT PRICE	LAND VALUE	OTHER ADJUSTMENTS AND NOTES	YEAR	DENSITY	DECL	FRZ	YR	CONSRV
1	000115	C	SFR ACRES	0	0006	OR	0.00	0.00	1.00	AC		1.00	1.00	1.00	30,000.00	30,000.00	30,000							

REVIEW DATE 05/17/2021 BY TWA Total Acres: 1.00 Total Land Value: 30,000 Market: 0 Agricultural: 0 Common: 30,000 PRINTED 08/06/2024 BY SYS