LOT ADJ LOT 59 MIRAMAR
IN OR 2134/748

TWARDY JOHN & SARAH
1818 1ST AVE
FERNANDINA BEACH, FL 32034

2024

20-3N-29-0000-0037-0000

NASSAU COUNTY PROPERTY

BUILDING CHARACTERISTICS

ELEMENT	CD	CONSTRUCTION
Exterior Wall	10	ABOVE AVG 50
Exterior Wall	23	REINF CONC 50
Roof Structur	03	GABLE/HIP 100
Roof Cover	03	COMP SHNGL 100
Interior Wall	05	DRYWALL 100
Interior Floo	11	CLAY TILE 80
Interior Floo	14	CARPET 20
Air Condition	03	CENTRAL 100
Heating Type	04	AIR DUCTED 100
Bedrooms		3 100
Bathrooms		3.5 100
Frame	03	MASONRY 100
Stories	2.	2. 100
Units		0 100
Occupancy	00	NONE 100
Quality	04	Quality Level 04
DOR CODE	0100	SINGLE FAMILY
MAP NUM		MKT AREA 01
NEIGHBORHOOD/LOC	1042.00	

AREA TYPE	TOTAL GROSS AREA	PCT OF BASE	TOT ADJ AREA	SUBAREA MARKET VALUE
BAL	30	15	4	546
BAL	232	15	35	4,778
BAL	32	15	5	683
BAL	70	15	10	1,365
BAL	70	15	10	1,365
BAS	504	100	504	68,805
BAS	390	100	390	53,243
FGR	480	55	264	36,041
FGR	286	55	157	21,434
FOP	48	30	14	1,912
TOTALS	5,019		3,363	459,113

MARKET ADJUSTMENTS

TYPE	MDL	EFF. AREA	TOT ADJ PTS	EFF. BASE RATE	REPL. COST NEW	AYB	EYB	ECON	FNCT		NORM	% COND
0900	01	3,363	119.6874	149.61	503,138	1989	2005	0	0	0	8.75	91.25

1 SNGL FAM – 100% - 2018 Heated Area: 2609 HX Base Yr 2018

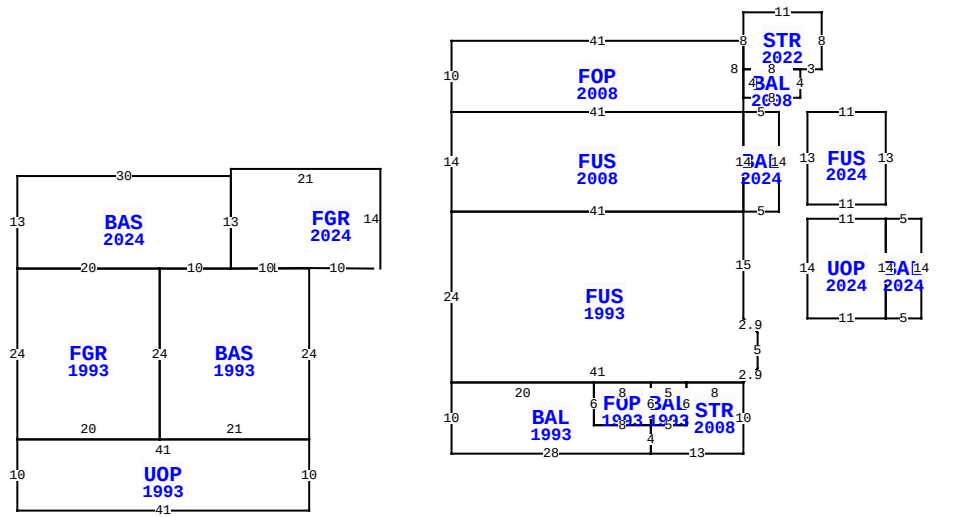

** This building has 18 Sub-Areas

1818 1ST AVE, FERNANDINA BEACH

BLD DATE		LGL DATE	
XF DATE		LAND DATE	05/08/2024 MLU
INC DATE		AG DATE	

VALUATION SUMMARY

VALUATION BY		STANDARD
Tax Group: 2	Tax Dist:	
BUILDING MARKET VALUE		459,113
TOTAL MARKET OB/XF VALUE		53,144
TOTAL LAND VALUE - MARKET		337,500
TOTAL MARKET VALUE		849,757
SOH/AGL Deduction		267,796
ASSESSED VALUE		581,961
TOTAL EXEMPTION VALUE	HX HB	50,000
BASE TAXABLE VALUE		531,961
TOTAL JUST VALUE		849,757
NCON VALUE		57,873
INCOME VALUE		
PREVIOUS YEAR MKT VALUE		700,468

PERMIT NUM	DESCRIPTION	AMT	ISSUED
20221986	320G 415B 137FUS	118,560	09/26/2022
20190071	SWIM POOL	0	02/04/2019
20120559	H/AC	2,000	04/04/2012
20080373	REPAIR/RRF	6,000	03/12/2008
20080155	H/AC	2,500	02/04/2008
20080071	OTHER	3,800	01/16/2008

SALES DATA

OFF RECORD Number	DATE	TYPE INST	Q / U	V / I	RSN CD	SALE PRICE
2134/0748	7/18/2017	WD	Q	I	01	495,000
GRANTOR: SPRIGGS CAROL & NELSO						
GRANTEE: TWARDY JOHN & SARAH						
1828/0001	11/28/2012	WD	Q	I	02	420,000
GRANTOR: HURTSELLERS JAMES L &						
GRANTEE: SPRIGGS CAROL & NEL						

BUILDING NOTES

EXTRA FEATURES

L N	OB/XF CODE	DESCRIPTION	BLD	CAP	L	W	UNITS	UT	Adj R	ADJ UNIT PRICE	ORIG COND	YEAR ON	YEAR ACTUAL	Q	% COND	OB/XF MKT VALUE	NOTES
1	0810	CONCRETE A	0	100	23	14	322.00	SF	6.50	6.50	100	2008	2008	3	89	1,863	
2	0855	CONC PAVER	0	100	0	0	338.00	SF	10.00	10.00	100	2008	2008	3	89	3,008	
3	0861	POOL GUNIT	0	100	0	0	490.00	SF	85.00	85.00	100	2019	2019	3	90	37,485	
4	0855	CONC PAVER	0	100	0	0	480.00	SF	10.00	10.00	100	2019	2019	3	98	4,704	
5	0462	ST/AL FNC	0	100	0	0	676.00	SF	10.00	10.00	100	2019	2019	3	90	6,084	

BUILDING DIMENSIONS

FUS=[YR=1993;ORIG=61,30] U2R2 N5 U2L2 N15 W41 S24 E41 $
FUS=[YR=2008;ORIG=61,6] N14 W41 S14 E41 $
BAS=[YR=1993;ORIG=0,38] N24 W11 W10 S24 E21 $
FGR=[YR=1993;ORIG=-41,14] S24 E20 N24 W20 $
UOP=[YR=1993;ORIG=-41,38] S10 E41 N10 W41 $
FOP=[YR=2008;ORIG=61,-8] N2 N8 W41 S10 E41 $
BAL=[YR=1993;ORIG=20,40] E28 N4 W8 N6 W20 S10 $
STR=[YR=2008;ORIG=48,40] E13 N10 W8 S6 W5 S4 $
STR=[YR=2022;ORIG=69,-14] E3 N8 W11 S8 E8 $
FOP=[YR=1993;ORIG=48,30] W8 S6 E8 N6 $
BAL=[YR=2008;ORIG=61,-10] E8 N4 W8 S4 $
BAL=[YR=1993;ORIG=53,30] W5 S6 E5 N6 $

LAND DESCRIPTION

TOTAL OB/XF 53,144

L N	USE CODE	CLS	LAND USE DESCRIPTION	CAP	R D	LOC ZONE	FRONT	DEPTH	TOT LND UTS	UNIT TYPE	D T	DPTH FACT	% COND	TOT ADJ	UNIT PRICE	ADJ UNIT PRICE	LAND VALUE	OTHER ADJUSTMENTS AND NOTES	YEAR	DENSITY	DECL	FRZ	YR	CONSRV
1	000100	C	SFR	100	0006	R-1	75.00	125.00	75.00	FF		1.00	1.00	1.00	4,500.00	4,500.00	337,500							

REVIEW DATE 02/15/2024 BY DJ Total Acres: 0.00 Total Land Value: 337,500 Market: 0 Agricultural: 0 Common: 337,500 PRINTED 08/06/2024 BY SYS