IN OR 2179/394

**SAMSON DAVID H JR & LAVERNE W**
1866 1ST AVE
FERNANDINA BEACH, FL 32034

# 2024

**20-3N-29-0000-0026-0000**

## BUILDING CHARACTERISTICS

| ELEMENT | CD | CONSTRUCTION |
|---|---|---|
| Exterior Wall | 10 | ABOVE AVG 60 |
| Exterior Wall | 23 | REINF CONC 40 |
| Roof Structur | 03 | GABLE/HIP 100 |
| Roof Cover | 03 | COMP SHNGL 100 |
| Interior Wall | 05 | DRYWALL 100 |
| Interior Floo | 11 | CLAY TILE 70 |
| Interior Floo | 14 | CARPET 30 |
| Air Condition | 03 | CENTRAL 100 |
| Heating Type | 04 | AIR DUCTED 100 |
| Bedrooms | | 3 100 |
| Bathrooms | | 4 100 |
| Frame | 02 | WOOD FRAME 100 |
| Stories | 3. | 3. 100 |
| Units | | 0 100 |
| Occupancy | 00 | NONE 100 |
| Quality | 04 | Quality Level 04 |
| DOR CODE | 0100 | SINGLE FAMILY |
| MAP NUM | | MKT AREA 01 |
| NEIGHBORHOOD/LOC | 1042.00 | |

| AREA TYPE | TOTAL GROSS AREA | PCT OF BASE | TOT ADJ AREA | SUBAREA MARKET VALUE |
|---|---|---|---|---|
| BAL | 42 | 15 | 6 | 782 |
| BAS | 1,300 | 100 | 1,300 | 169,483 |
| FGR | 1,100 | 55 | 605 | 78,875 |
| FOP | 78 | 30 | 23 | 2,998 |
| FOP | 200 | 30 | 60 | 7,822 |
| FOP | 500 | 30 | 150 | 19,556 |
| FUS | 1,300 | 100 | 1,300 | 169,483 |
| STR | 20 | 10 | 2 | 260 |
| STR | 24 | 10 | 2 | 260 |
| UOP | 500 | 20 | 100 | 13,037 |
| TOTALS | 5,564 | | 3,648 | 475,596 |

## MARKET ADJUSTMENTS

| TYPE | MDL | EFF. AREA | TOT ADJ PTS | EFF. BASE RATE | REPL. COST NEW | AYB | EYB | ECON | FNCT | | NORM | % COND |
|---|---|---|---|---|---|---|---|---|---|---|---|---|
| 0900 | 01 | 3,648 | 116.1405 | 145.18 | 529,617 | 2001 | 2002 | 0 | 0 | 0 | 10.20 | 89.80 |

1 SNGL FAM – 100% - 2010 Heated Area: 2600 HX Base Yr 2010

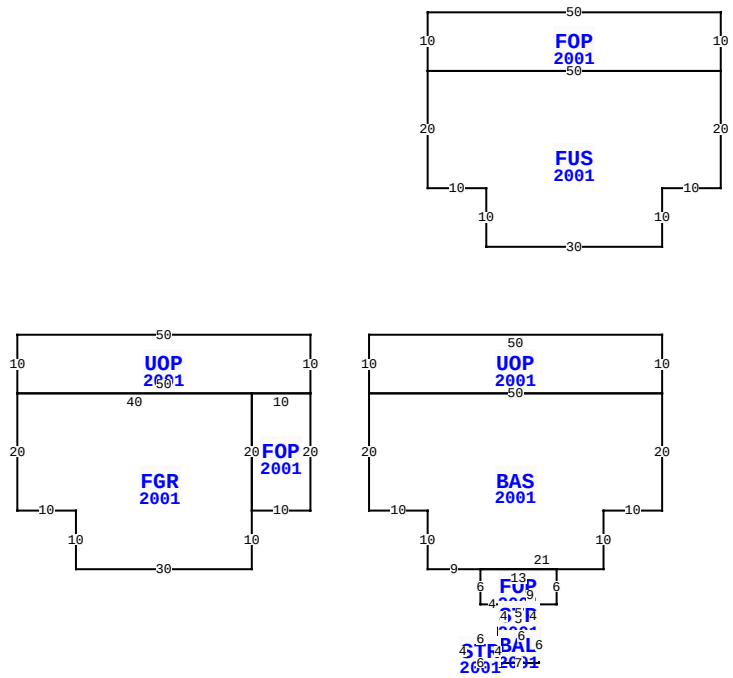


** This building has 11 Sub-Areas

1866 1ST AVE, FERNANDINA BEACH

| | | | |
|---|---|---|---|
| BLD DATE | | LGL DATE | |
| XF DATE | | LAND DATE | 05/08/2024 MLU |
| INC DATE | | AG DATE | |

## NASSAU COUNTY PROPERTY

PAGE 1 of 1 2

### VALUATION SUMMARY

| | | |
|---|---|---|
| VALUATION BY | | STANDARD |
| Tax Group: 2 | Tax Dist: | |
| BUILDING MARKET VALUE | | 475,596 |
| TOTAL MARKET OB/XF VALUE | | 16,911 |
| TOTAL LAND VALUE - MARKET | | 405,000 |
| TOTAL MARKET VALUE | | 897,507 |
| SOH/AGL Deduction | | 415,586 |
| ASSESSED VALUE | | 481,921 |
| TOTAL EXEMPTION VALUE | HX HB | 50,000 |
| BASE TAXABLE VALUE | | 431,921 |
| TOTAL JUST VALUE | | 897,507 |
| NCON VALUE | | 0 |
| INCOME VALUE | | |
| PREVIOUS YEAR MKT VALUE | | 786,622 |

| PERMIT NUM | DESCRIPTION | AMT | ISSUED |
|---|---|---|---|
| 20062723 | WIRING FOR ADDITI | 1,200 | 12/11/2006 |
| 20062079 | ENCLOSE PORCH | 12,225 | 09/11/2006 |
| 20052454 | WINDOWS FOR PORCH | 2,000 | 08/16/2005 |
| 20011015 | H/AC | 3,000 | 02/24/2001 |
| 20010222 | NEW CONSTR | 3,000 | 02/12/2001 |
| 2004226 | NEW CONSTR | 7,000 | 10/24/2000 |

## SALES DATA

| OFF RECORD Number | DATE | TYPE INST | Q U | V I | RSN CD | SALE PRICE |
|---|---|---|---|---|---|---|
| 2179/0394 | 2/15/2018 | QC | U | I | 11 | 100 |
| GRANTOR: SAMSON DAVID & LAVERN | | | | | | |
| GRANTEE: SAMSON DAVID H JR & | | | | | | |
| 1648/1139 | 10/08/2009 | WD | Q | I | 01 | 522,500 |
| GRANTOR: MACPHERSON ROBERT I & | | | | | | |
| GRANTEE: SAMSON DAVID HENRY | | | | | | |

## BUILDING NOTES

## BUILDING DIMENSIONS

UOP=[YR=2001] W50 S10 BAS=[YR=2001] S20 E10 S10 E9
FOP=[YR=2001] S6E4 STR=[YR=2001] S4 BAL=[YR=2001] W1S2
STR=[YR=2001] W6S4E6N4$ S4E7N6W6$ E5 N4W5$ E9 N6 W13$ E21 N10
E10 N20 W50$ E50 N10$ PTR=W60 UOP=[YR=2001] W50S10
FGR=[YR=2001] S20E10 S10E30N10 FOP=[YR=2001] E10N20W10S20 $
N20W40$ E50N10$E60$ PTR= N15 FUS=[YR=2001] N10 E10 N20
FOP=[YR=2001] N10W50S10E50$ W50S20E10S10E30$ S15 $ .

## EXTRA FEATURES

| LN | OB/XF CODE | DESCRIPTION | BLD | CAP | L | W | UNITS | UT | Adj R | ADJ UNIT PRICE | ORIG COND | YEAR ON | YEAR ACTUAL | Q | % COND | OB/XF MKT VALUE | NOTES |
|---|---|---|---|---|---|---|---|---|---|---|---|---|---|---|---|---|---|
| 1 | 0500 | FP-PRE FAB | 0 | 100 | 0 | 0 | 1.00 | UT | 3,500.00 | 3,500.00 | 100 | 2001 | 2001 | 3 | 85 | 2,975 | |
| 2 | 0810 | CONCRETE A | 0 | 100 | 0 | 0 | 2,680.00 | SF | 6.50 | 6.50 | 100 | 2001 | 2001 | 3 | 80 | 13,936 | |

## LAND DESCRIPTION

TOTAL OB/XF 16,911

| LN | USE CODE | CLS | LAND USE DESCRIPTION | CAP | RD | LOC ZONE | FRONT | DEPTH | TOT LND UTS | UNIT TYPE | DT | DPTH FACT | % COND | TOT ADJ | UNIT PRICE | ADJ UNIT PRICE | LAND VALUE | OTHER ADJUSTMENTS AND NOTES | YEAR | DENSITY | DECL | FRZ | YR | CONSRV |
|---|---|---|---|---|---|---|---|---|---|---|---|---|---|---|---|---|---|---|---|---|---|---|---|---|
| 1 | 000100 | C | SFR | 100 | 0006 | R-1 | 100.00 | 125.00 | 100.00 | FF | | 1.00 | 1.00 | 0.90 | 4,500.00 | 4,050.00 | 405,000 | | | | | | | |

REVIEW DATE 05/12/2019 BY KBA Total Acres: 0.00 Total Land Value: 405,000 Market: 0 Agricultural: 0 Common: 405,000 PRINTED 08/06/2024 BY SYS