PT OF GOVT LOT 2
IN OR 2676/1553

**BINKLEY-CLARK PATRICIA/MCCLAIN GERALDINE LISA**
2288 B 1ST AV
FERNANDINA BEACH, FL 32034

**2024**

**20-3N-29-0000-0014-0270**

## NASSAU COUNTY PROPERTY



### BUILDING CHARACTERISTICS

| ELEMENT | CD | CONSTRUCTION |
|---|---|---|
| Exterior Wall | 16 | WD FR STUC 100 |
| Roof Structur | 03 | GABLE/HIP 100 |
| Roof Cover | 03 | COMP SHNGL 100 |
| Interior Wall | 05 | DRYWALL 100 |
| Interior Floo | 14 | CARPET 70 |
| Interior Floo | 11 | CLAY TILE 30 |
| Air Condition | 03 | CENTRAL 100 |
| Heating Type | 04 | AIR DUCTED 100 |
| Bedrooms | | 3 100 |
| Bathrooms | | 2.5 100 |
| Frame | 02 | WOOD FRAME 100 |
| Stories | 2. | 2. 100 |
| Units | | 0 100 |
| Quality | 04 | Quality Level 04 |

DOR CODE 0100 SINGLE FAMILY
MAP NUM | MKT AREA 01
NEIGHBORHOOD/LOC 1043.00

| AREA TYPE | TOTAL GROSS AREA | PCT OF BASE | TOT ADJ AREA | SUBAREA MARKET VALUE |
|---|---|---|---|---|
| BAL | 210 | 15 | 32 | 4,085 |
| BAL | 277 | 15 | 42 | 5,362 |
| BAS | 886 | 100 | 886 | 113,098 |
| DCK | 28 | 10 | 3 | 383 |
| FGR | 434 | 55 | 239 | 30,508 |
| FOP | 45 | 30 | 14 | 1,788 |
| FUS | 1,122 | 100 | 1,122 | 143,224 |
| PTO | 128 | 5 | 6 | 766 |
| TOTALS | 3,130 | | 2,344 | 299,212 |

### MARKET ADJUSTMENTS

| TYPE | MDL | EFF. AREA | TOT ADJ PTS | EFF. BASE RATE | REPL. COST NEW | AYB | EYB | ECON | FNCT | | NORM | % COND |
|---|---|---|---|---|---|---|---|---|---|---|---|---|
| 0320 | 11 | 2,344 | 146.0474 | 138.75 | 325,230 | 2002 | 2007 | 0 | 0 | 0 | 8.00 | 92.00 |

1 TOWNHOUSE - 100% - 2024 Heated Area: 2008 HX Base Yr 2024

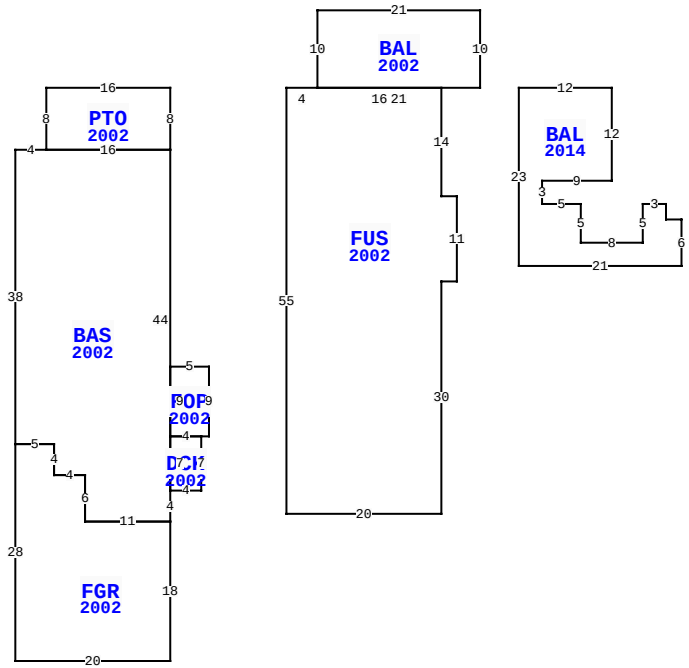


2288-B 1ST AV, FERNANDINA BEACH

| | | | |
|---|---|---|---|
| BLD DATE | 05/24/2010 DJ | LGL DATE | |
| XF DATE | | LAND DATE | 03/13/2024 MLU |
| INC DATE | | AG DATE | |

### VALUATION SUMMARY

| | | |
|---|---|---|
| VALUATION BY | | STANDARD |
| Tax Group: 2 | Tax Dist: | |
| BUILDING MARKET VALUE | | 299,212 |
| TOTAL MARKET OB/XF VALUE | | 4,018 |
| TOTAL LAND VALUE - MARKET | | 257,418 |
| TOTAL MARKET VALUE | | 560,648 |
| SOH/AGL Deduction | | 0 |
| ASSESSED VALUE | | 560,648 |
| TOTAL EXEMPTION VALUE | HX HB WX | 55,000 |
| BASE TAXABLE VALUE | | 505,648 |
| TOTAL JUST VALUE | | 560,648 |
| NCON VALUE | | 0 |
| INCOME VALUE | | |
| PREVIOUS YEAR MKT VALUE | | 514,494 |

| PERMIT NUM | DESCRIPTION | AMT | ISSUED |
|---|---|---|---|
| 20110954 | H/AC | 1,475 | 06/13/2011 |
| 20110614 | REPAIR/RRF | 7,500 | 04/25/2011 |

### SALES DATA

| OFF RECORD Number | DATE | TYPE INST | Q U | V I | RSN CD | SALE PRICE |
|---|---|---|---|---|---|---|
| 2676/1553 | 10/31/2023 | WD | Q | I | 01 | 725,000 |
| GRANTOR: PETERSON VICKI L | | | | | | |
| GRANTEE: BINKLEY-CLARK PATRI | | | | | | |
| 1655/1667 | 12/29/2009 | WD | U | I | 38 | 245,000 |
| GRANTOR: PREUSSER MICHAEL N TR | | | | | | |
| GRANTEE: PETERSON WILLIAM M | | | | | | |

### BUILDING NOTES

### BUILDING DIMENSIONS

PTO=[YR=2002] W16 S8 BAS=[YR=2002] W4 S38 FGR=[YR=2002] S28 E20 N18 W11 N6 W4 N4 W5$ E5 S4 E4 S6 E11 N4 DCK=[YR=2002] E4 N7 FOP=[YR=2002] E1 N9 W5 S9 E4$ W4 S7$ N44 W16$ E16 N8$PTR=E15 FUS=[YR=2002] E4 BAL=[YR=2002] N10 E21 S10 W21$ E16 S14 E2 S11 W2 S30 W20 N55$ W15 $ PTR=E45 BAL=[YR=2014] E12 S12 W9 S3 E5 S5 E8 N5 E3 S2 E2 S6 W21 N23$ W45$.

### EXTRA FEATURES

| LN | OB/XF CODE | DESCRIPTION | BLD | CAP | L | W | UNITS | UT | Adj R | ADJ UNIT PRICE | ORIG COND | YEAR ON | YEAR ACTUAL | Q | % COND | OB/XF MKT VALUE | NOTES |
|---|---|---|---|---|---|---|---|---|---|---|---|---|---|---|---|---|---|
| 1 | 0811 | CONCRETE B | 0 | 100 | 0 | 0 | 796.00 | SF | 5.20 | 5.20 | 100 | 2002 | 2002 | 3 | 82 | 3,394 | |
| 2 | 0810 | CONCRETE A | 0 | 100 | 0 | 0 | 117.00 | SF | 6.50 | 6.50 | 100 | 2002 | 2002 | 3 | 82 | 624 | |

### LAND DESCRIPTION

TOTAL OB/XF 4,018

| LN | USE CODE | CLS | LAND USE DESCRIPTION | CAP | RD | LOC ZONE | FRONT | DEPTH | TOT LND UTS | UNIT TYPE | DT | DPTH FACT | % COND | TOT ADJ | UNIT PRICE | ADJ UNIT PRICE | LAND VALUE | OTHER ADJUSTMENTS AND NOTES | YEAR | DENSITY | DECL | FRZ | YR | CONSRV |
|---|---|---|---|---|---|---|---|---|---|---|---|---|---|---|---|---|---|---|---|---|---|---|---|---|
| 1 | 000100 | C | SFR | 100 | | R-2 | 40.00 | 129.00 | 40.86 | FF | | 1.00 | 1.00 | 1.40 | 4,500.00 | 6,300.00 | 257,418 | | | | | | | |

REVIEW DATE 04/01/2020 BY DJA Total Acres: 0.00 Total Land Value: 257,418 Market: 0 Agricultural: 0 Common: 257,418 PRINTED 08/06/2024 BY SYS