IN OR 1910/1676

BATES CAROLYN A REV TRUST/BATES CAROLYN A TRUSTEE
286 CROIX RIDGE DR
HUDSON, WI 54016

2024

20-3N-29-0000-0014-0220

BUILDING CHARACTERISTICS

ELEMENT	CD	CONSTRUCTION
Exterior Wall	16	WD FR STUC 100
Roof Structur	03	GABLE/HIP 100
Roof Cover	03	COMP SHNGL 100
Interior Wall	05	DRYWALL 100
Interior Floo	14	CARPET 80
Interior Floo	08	SHT VINYL 20
Air Condition	03	CENTRAL 100
Heating Type	04	AIR DUCTED 100
Bedrooms		3 100
Bathrooms		2.5 100
Frame	02	WOOD FRAME 100
Stories	2.	2. 100
Units		0 100
Quality	05	Quality Level 05
DOR CODE	0100	SINGLE FAMILY
MAP NUM		MKT AREA 01
NEIGHBORHOOD/LOC	1043.00	

AREA TYPE	TOTAL GROSS AREA	PCT OF BASE	TOT ADJ AREA	SUBAREA MARKET VALUE
BAS	700	100	700	84,822
DCK	128	10	13	1,576
DCK	32	10	3	364
FGR	460	55	253	30,657
FOP	54	30	16	1,938
FUS	1,142	100	1,142	138,380
PTO	128	5	6	727
TOTALS	2,644		2,133	258,463

MARKET ADJUSTMENTS

TYPE	MDL	EFF. AREA	TOT ADJ PTS	EFF. BASE RATE	REPL. COST NEW	AYB	EYB	ECON	FNCT		NORM	% COND
0320	11	2,133	146.6080	139.28	297,084	1997	1997	0	0	0	13.00	87.00

1 TOWNHOUSE - 0% - 0 Heated Area: 1842 HX Base Yr

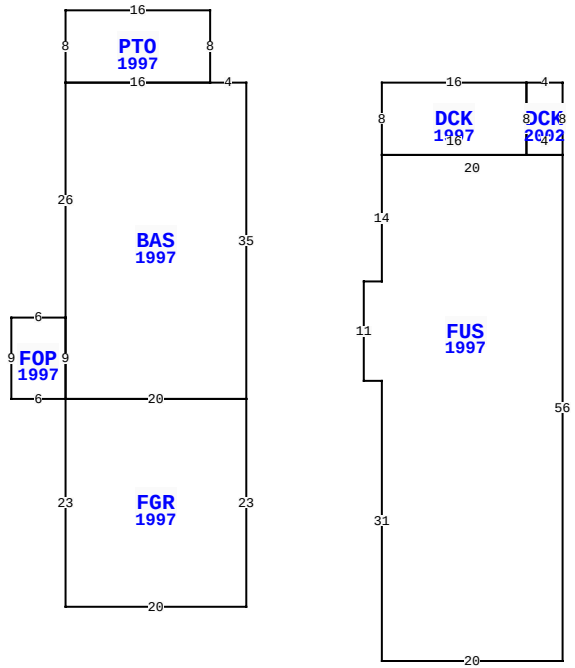

2298 1ST AVE A, FERNANDINA BEACH

BLD DATE		LGL DATE	
XF DATE		LAND DATE	03/13/2024 MLU
INC DATE		AG DATE	

NASSAU COUNTY PROPERTY

PAGE 1 of 1 2

VALUATION SUMMARY

VALUATION BY	STANDARD
Tax Group: 2	Tax Dist:
BUILDING MARKET VALUE	258,463
TOTAL MARKET OB/XF VALUE	7,469
TOTAL LAND VALUE - MARKET	256,347
TOTAL MARKET VALUE	522,279
SOH/AGL Deduction	103,418
ASSESSED VALUE	418,861
TOTAL EXEMPTION VALUE	0
BASE TAXABLE VALUE	418,861
TOTAL JUST VALUE	522,279
NCON VALUE	0
INCOME VALUE	
PREVIOUS YEAR MKT VALUE	495,444

PERMIT NUM	DESCRIPTION	AMT	ISSUED
20111095	H/AC	0	07/05/2011

SALES DATA

OFF RECORD Number	DATE	TYPE INST	Q U	V I	RSN CD	SALE PRICE
1910/1676	3/10/2014	QC	U	I	11	100
GRANTOR: BATES CAROLYN A						
GRANTEE: BATES CAROLYN A TRU						
0899/1976	9/21/1999	QC	U	V	01	100
GRANTOR: ISAAC THOMAS A & CARO						
GRANTEE: ISAAC THOMAS A & CA						

BUILDING NOTES

BUILDING DIMENSIONS

BAS=[YR=1997] W4 PTO=[YR=1997] N8 W16 S8 E16 $ W16 S26 FOP=[YR=1997] W6 S9 E6 FGR=[YR=1997] S23 E20 N23 W20 $ N9 $ S9 E20 N35 $ PTR= E15 DCK=[YR=1997] E16 DCK=[YR=2002] E4 S8 FUS=[YR=1997] S56 W20 N31 W2 N11 E2 N14 E20 $ W4 N8 $ S8 W16 N8 $ W15 $.

EXTRA FEATURES

LN	OB/XF CODE	DESCRIPTION	BLD	CAP	L	W	UNITS	UT	Adj R	ADJ UNIT PRICE	ORIG COND	YEAR ON	YEAR ACTUAL	Q	% COND	OB/XF MKT VALUE	NOTES
1	0500	FP-PRE FAB	0	0	0	0	1.00	UT	3,500.00	3,500.00	100	1997	1997	3	80	2,800	
2	0810	CONCRETE A	0	0	0	0	984.00	SF	6.50	6.50	100	1997	1997	3	73	4,669	

LAND DESCRIPTION

TOTAL OB/XF 7,469

LN	USE CODE	CLS	LAND USE DESCRIPTION	CAP	RD	LOC ZONE	FRONT	DEPTH	TOT LND UTS	UNIT TYPE	DT	DPTH FACT	% COND	TOT ADJ	UNIT PRICE	ADJ UNIT PRICE	LAND VALUE	OTHER ADJUSTMENTS AND NOTES	YEAR	DENSITY	DECL	FRZ	YR	CONSRV
1	000100	C	SFR	0		R-2	40.00	129.00	40.69	FF		1.00	1.00	1.40	4,500.00	6,300.00	256,347							

REVIEW DATE 04/01/2020 BY DJA Total Acres: 0.00 Total Land Value: 256,347 Market: 0 Agricultural: 0 Common: 256,347 PRINTED 08/06/2024 BY SYS