IN OR 2699/352
COV & REST PT OR 851/1121

POLLACK MARK C
2154 1ST AVE B
FERNANDINA BEACH, FL 32034

2024

20-3N-29-0000-0014-0210

BUILDING CHARACTERISTICS

ELEMENT	CD	CONSTRUCTION
Exterior Wall	10	ABOVE AVG 100
Roof Structur	03	GABLE/HIP 100
Roof Cover	03	COMP SHNGL 100
Interior Wall	05	DRYWALL 100
Interior Floo	14	CARPET 80
Interior Floo	08	SHT VINYL 20
Air Condition	03	CENTRAL 100
Heating Type	04	AIR DUCTED 100
Bedrooms		3 100
Bathrooms		2.5 100
Frame	02	WOOD FRAME 100
Stories	2.	2. 100
Units		0 100
Quality	04	Quality Level 04
DOR CODE	0100	SINGLE FAMILY
MAP NUM		MKT AREA 01
NEIGHBORHOOD/LOC	1043.00	

AREA TYPE	TOTAL GROSS AREA	PCT OF BASE	TOT ADJ AREA	SUBAREA MARKET VALUE
BAL	256	15	38	4,562
BAS	590	100	590	70,824
FGR	420	55	231	27,730
FOP	32	30	10	1,200
FUS	1,087	100	1,087	130,485
PTO	160	5	8	960
TOTALS	2,545		1,964	235,760

MARKET ADJUSTMENTS

TYPE	MDL	EFF. AREA	TOT ADJ PTS	EFF. BASE RATE	REPL. COST NEW	AYB	EYB	ECON	FNCT		NORM	% COND
0320	11	1,964	143.5896	136.41	267,909	1998	1998	0	0	0	12.00	88.00

1 TOWNHOUSE - 0% - 0 Heated Area: 1677 HX Base Yr

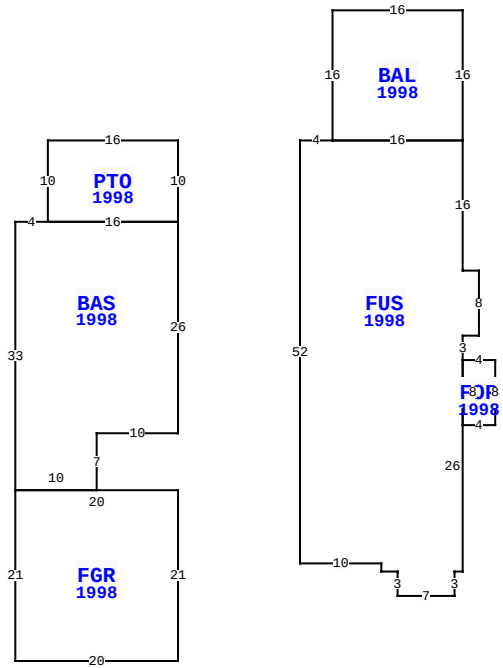

2154 1ST AVE B, FERNANDINA BEACH

BLD DATE		LGL DATE	
XF DATE		LAND DATE	03/13/2024 MLU
INC DATE		AG DATE	

NASSAU COUNTY PROPERTY

PAGE 1 of 1 2

VALUATION SUMMARY

VALUATION BY	STANDARD
Tax Group: 2	Tax Dist:
BUILDING MARKET VALUE	235,760
TOTAL MARKET OB/XF VALUE	9,094
TOTAL LAND VALUE - MARKET	216,000
TOTAL MARKET VALUE	460,854
SOH/AGL Deduction	0
ASSESSED VALUE	460,854
TOTAL EXEMPTION VALUE	0
BASE TAXABLE VALUE	460,854
TOTAL JUST VALUE	460,854
NCON VALUE	0
INCOME VALUE	
PREVIOUS YEAR MKT VALUE	438,295

PERMIT NUM	DESCRIPTION	AMT	ISSUED
20111324	H/AC	1,300	08/08/2011

SALES DATA

OFF RECORD Number	DATE	TYPE INST	Q / U	V / I	RSN CD	SALE PRICE
2699/352	3/08/2024	WD	Q	I	01	625,000
GRANTOR: FLESS DONALD E						
GRANTEE: POLLACK MARK C						
2169/0834	12/13/2017	FJ	U	I	11	100
GRANTOR: FLESS TONI A ESTATE						
GRANTEE: FLESS DONALD E						

BUILDING NOTES

BUILDING DIMENSIONS

PTO=[YR=1998] W16 S10 BAS=[YR=1998] W4 S33 FGR=[YR=1998] S21 E20 N21 W20$ E10 N7 E10 N26 W16$ E16 N10$ PTR= E15 FUS=[YR=1998] E4 BAL=[YR=1998] N16 E16 S16 W16$ E16 S16 E2 S8 W2 S3 FOP=[YR=1998] E4 S8 W4 N8$ S26 W1 S3 W7 N3 W2 N1 W10 N52$ W15$.

EXTRA FEATURES

LN	OB/XF CODE	DESCRIPTION	BLD	CAP	L	W	UNITS	UT	Adj R	ADJ UNIT PRICE	ORIG COND	YEAR ON	YEAR ACTUAL	Q	% COND	OB/XF MKT VALUE	NOTES
1	0855	CONC PAVER	0	0	0	0	949.00	SF	10.00	10.00	100	2012	2012	3	93	8,826	
2	0810	CONCRETE A	0	0	0	0	39.00	SF	6.50	6.50	100	1998	1998	3	75	190	
3	0810	CONCRETE A	0	0	4	4	16.00	SF	6.50	6.50	100	1998	1998	3	75	78	

LAND DESCRIPTION

TOTAL OB/XF 9,094

LN	USE CODE	CLS	LAND USE DESCRIPTION	CAP	RD	LOC ZONE	FRONT	DEPTH	TOT LND UTS	UNIT TYPE	DT	DPTH FACT	% COND	TOT ADJ	UNIT PRICE	ADJ UNIT PRICE	LAND VALUE	OTHER ADJUSTMENTS AND NOTES	YEAR	DENSITY	DECL	FRZ	YR	CONSRV
1	000100	C	SFR	0		R-2	32.00	129.00	32.00	FF		1.00	1.00	1.50	4,500.00	6,750.00	216,000							

REVIEW DATE 12/28/2022 BY TWA Total Acres: 0.00 Total Land Value: 216,000 Market: 0 Agricultural: 0 Common: 216,000 PRINTED 08/06/2024 BY SYS