IN OR 847/453
CNVTS & RSTRTNS PT OR 851/1099

HAGAN DENNIS W
1122 HAILEY ST
MELBOURNE, FL 32904-8208

2024

20-3N-29-0000-0014-0200

BUILDING CHARACTERISTICS

ELEMENT	CD	CONSTRUCTION
Exterior Wall	10	ABOVE AVG 60
Exterior Wall	05	AVERAGE 40
Roof Structur	03	GABLE/HIP 100
Roof Cover	03	COMP SHNGL 100
Interior Wall	05	DRYWALL 100
Interior Floo	14	CARPET 80
Interior Floo	08	SHT VINYL 20
Air Condition	03	CENTRAL 100
Heating Type	04	AIR DUCTED 100
Bedrooms		3 100
Bathrooms		2 100
Frame	02	WOOD FRAME 100
Stories	2.	2. 100
Units		0 100
Quality	04	Quality Level 04
DOR CODE	0100	SINGLE FAMILY
MAP NUM		MKT AREA 01
NEIGHBORHOOD/LOC	1043.00	

AREA TYPE	TOTAL GROSS AREA	PCT OF BASE	TOT ADJ AREA	SUBAREA MARKET VALUE
BAL	96	15	14	1,679
BAS	580	100	580	69,560
FGR	299	55	164	19,669
FOP	28	30	8	960
FUS	950	100	950	113,934
PTO	32	5	2	240
PTO	104	5	5	599
STR	49	10	5	599
TOTALS	2,138		1,728	207,240

MARKET ADJUSTMENTS

TYPE	MDL	EFF. AREA	TOT ADJ PTS	EFF. BASE RATE	REPL. COST NEW	AYB	EYB	ECON	FNCT		NORM	% COND
0320	11	1,728	143.6160	136.44	235,768	1998	1998	0	0	0	12.10	87.90

1 TOWNHOUSE – 0% - 0 Heated Area: 1530 HX Base Yr

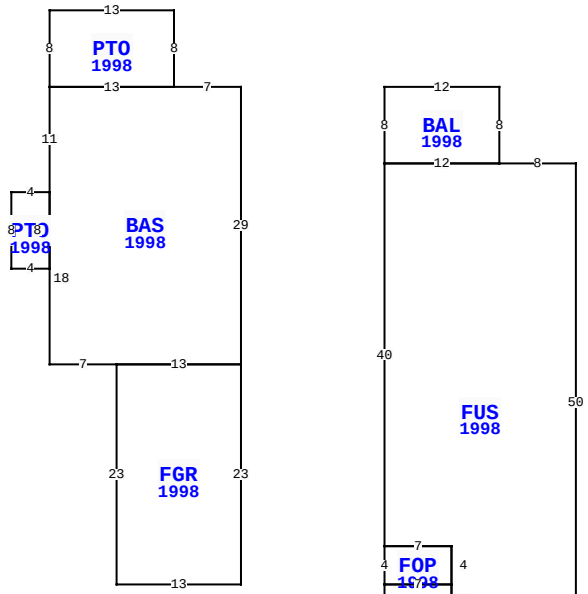

2144 1ST AV A, FERNANDINA BEACH

BLD DATE		LGL DATE	
XF DATE		LAND DATE	03/13/2024 MLU
INC DATE		AG DATE	

NASSAU COUNTY PROPERTY

PAGE 1 of 1 2

VALUATION SUMMARY

VALUATION BY	STANDARD
Tax Group: 2	Tax Dist:
BUILDING MARKET VALUE	207,240
TOTAL MARKET OB/XF VALUE	3,799
TOTAL LAND VALUE - MARKET	189,000
TOTAL MARKET VALUE	400,039
SOH/AGL Deduction	69,432
ASSESSED VALUE	330,607
TOTAL EXEMPTION VALUE	0
BASE TAXABLE VALUE	330,607
TOTAL JUST VALUE	400,039
NCON VALUE	0
INCOME VALUE	
PREVIOUS YEAR MKT VALUE	380,309

PERMIT NUM	DESCRIPTION	AMT	ISSUED

SALES DATA

OFF RECORD Number	DATE	TYPE INST	Q / U	V / I	RSN CD	SALE PRICE
1938/0608	9/16/2014	QC	U	I	11	79,500
GRANTOR: STRICKLAND ANN R						
GRANTEE: ROBAS VICTORIA B						
1938/0605	9/16/2014	QC	U	I	11	79,500
GRANTOR: ANDERSON JANE A						
GRANTEE: ROBAS VICTORIA B						

BUILDING NOTES

BUILDING DIMENSIONS

BAS=[YR=1998] W7 PTO=[YR=1998] N8 W13 S8 E13$ W13 S11 PTO=[YR=1998] W4 S8 E4 N8$ S18 E7 FGR=[YR=1998] S23 E13 N23 W13$ E13 N29$ PTR=E15 BAL=[YR=1998] E12 S8 FUS=[YR=1998] E8 S50 W3 S2 W10 N1 STR=[YR=1998] W7 N7 FOP=[YR=1998] N4 E7 S4W7 $E7S7$ N11W7 N40 E12$ W12 N8$ W15$.

EXTRA FEATURES

LN	OB/XF CODE	DESCRIPTION	BLD	CAP	L	W	UNITS	UT	Adj R	ADJ UNIT PRICE	ORIG COND	YEAR ON	YEAR ACTUAL	Q	% COND	OB/XF MKT VALUE	NOTES
1	0810	CONCRETE A	0	0	0	0	581.00	SF	6.50	6.50	100	1998	1998	3	75	2,832	
2	0810	CONCRETE A	0	0	0	0	61.00	SF	6.50	6.50	100	1998	1998	3	75	297	
3	0855	CONC PAVER	0	0	0	0	104.00	SF	7.00	7.00	100	2011	2011	3	92	670	

LAND DESCRIPTION

TOTAL OB/XF 3,799

LN	USE CODE	CLS	LAND USE DESCRIPTION	CAP	RD	LOC ZONE	FRONT	DEPTH	TOT LND UTS	UNIT TYPE	DT	DPTH FACT	% COND	TOT ADJ	UNIT PRICE	ADJ UNIT PRICE	LAND VALUE	OTHER ADJUSTMENTS AND NOTES	YEAR	DENSITY	DECL	FRZ	YR	CONSRV
1	000810	C	TOWNHOUSE1	0		R-2	28.00	130.00	28.00	FF		1.00	1.00	1.50	4,500.00	6,750.00	189,000							

REVIEW DATE 03/31/2020 BY DJA Total Acres: 0.00 Total Land Value: 189,000 Market: 0 Agricultural: 0 Common: 189,000 PRINTED 08/06/2024 BY SYS