PT OF LOT 36
IN OR 2232/1053
CORNWALL SURVEY

LLOYD NICHOLAS
26169 MARVEL RD
HILLIARD, FL 32046

2024

20-3N-24-2020-0036-0030

BUILDING CHARACTERISTICS

ELEMENT	CD	CONSTRUCTION
Exterior Wall	10	ABOVE AVG 90
Exterior Wall	20	FACE BRICK 10
Roof Structur	03	GABLE/HIP 100
Roof Cover	03	COMP SHNGL 100
Interior Wall	05	DRYWALL 100
Interior Floo	12	HARDWOOD 70
Interior Floo	11	CLAY TILE 30
Air Condition	03	CENTRAL 100
Heating Type	04	AIR DUCTED 100
Bedrooms		4 100
Bathrooms		2.5 100
Frame	02	WOOD FRAME 100
Stories	1.	1. 100
Units		0 100
BUD8 Adjustme	04	DIST 01 100
Occupancy	00	NONE 100
Quality	01	Quality Level 01

DOR CODE	0100	SINGLE FAMILY	
MAP NUM		MKT AREA	09
NEIGHBORHOOD/LOC	9001.00		

AREA TYPE	TOTAL GROSS AREA	PCT OF BASE	TOT ADJ AREA	SUBAREA MARKET VALUE
BAS	2,599	100	2,599	296,182
FGR	528	55	290	33,048
FOP	280	30	84	9,573
FOP	496	30	149	16,980
TOTALS	3,903		3,122	355,783

MARKET ADJUSTMENTS

TYPE	MDL	EFF. AREA	TOT ADJ PTS	EFF. BASE RATE	REPL. COST NEW	AYB	EYB	ECON	FNCT		NORM	% COND
0900	01	3,122	94.7232	118.40	369,645	2015	2015	0	0	0	3.75	96.25

1 SNGL FAM – 100% - 2005 Heated Area: 2599 HX Base Yr 2005

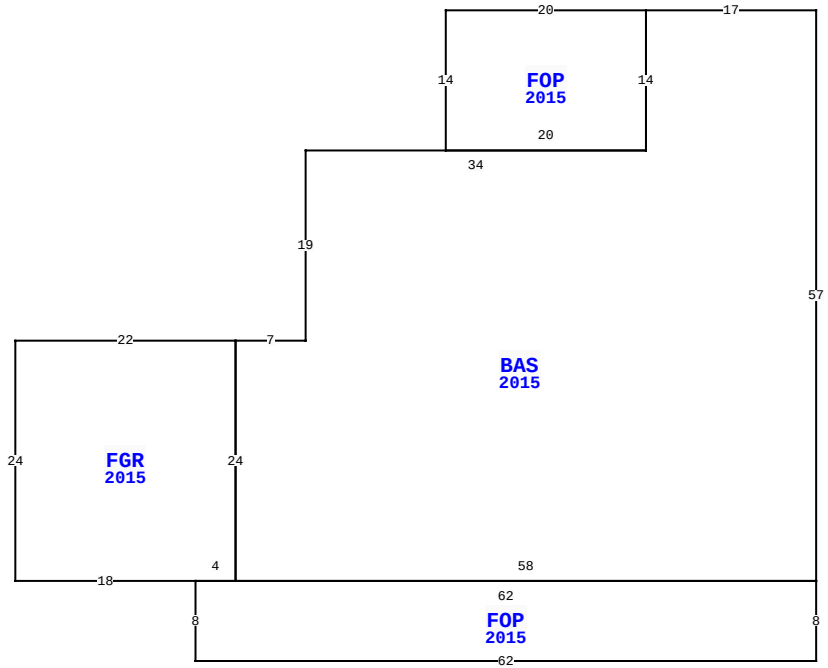

BLD DATE		LGL DATE	
XF DATE		LAND DATE	06/16/2023 MLU
INC DATE		AG DATE	

26169 MARVEL RD, HILLIARD

NASSAU COUNTY PROPERTY

PAGE 1 of 1 4

VALUATION SUMMARY

VALUATION BY		STANDARD
Tax Group: 4	Tax Dist:	
BUILDING MARKET VALUE		355,783
TOTAL MARKET OB/XF VALUE		11,498
TOTAL LAND VALUE - MARKET		96,140
TOTAL MARKET VALUE		463,421
SOH/AGL Deduction		158,680
ASSESSED VALUE		304,741
TOTAL EXEMPTION VALUE	HX HB	50,000
BASE TAXABLE VALUE		254,741
TOTAL JUST VALUE		463,421
NCON VALUE		0
INCOME VALUE		
PREVIOUS YEAR MKT VALUE		447,530

PERMIT NUM	DESCRIPTION	AMT	ISSUED
B1530466	CO ISSUED	0	12/23/2015
B1530466	NEW CONSTR	326,085	05/01/2015

SALES DATA

OFF RECORD Number	DATE	TYPE INST	Q / U	V / I	RSN CD	SALE PRICE
2232/1053	10/19/2018	QC	U	I	11	100
GRANTOR: LLOYD NICHOLAS A & LA						
GRANTEE: LLOYD NICHOLAS						
1969/1501	3/23/2015	WD	U	I	11	100
GRANTOR: LLOYD NICHOLAS A & LA						
GRANTEE: LLOYD NICHOLAS A &						

BUILDING NOTES

BUILDING DIMENSIONS

BAS=[YR=2015] W17 FOP=[YR=2015] W20 S14 E20 N14$ S14 W34 S19 W7 FGR=[YR=2015] W22 S24 E18 FOP=[YR=2015] S8 E62 N8 W62$ E4 N24$ S24 E58 N57$.

EXTRA FEATURES

LN	OB/XF CODE	DESCRIPTION	BLD	CAP	L	W	UNITS	UT	Adj R	ADJ UNIT PRICE	ORIG COND	YEAR ON	YEAR ACTUAL	Q	% COND	OB/XF MKT VALUE	NOTES
1	0681	POLE SHED	0	100	30	30	900.00	SF	15.00	15.00	100	1985	1985	3	20	2,700	
2	0812	CONCRETE C	0	100	0	0	1,521.00	SF	4.00	4.00	100	2015	2015	3	95	5,780	
3	0504	FP-ELECTRI	0	100	0	0	1.00	UT	2,000.00	2,000.00	100	2015	2015	3	97	1,940	
4	0855	CONC PAVER	0	100	0	0	110.00	SF	10.00	10.00	100	2019	2019	3	98	1,078	

LAND DESCRIPTION

TOTAL OB/XF 11,498

LN	USE CODE	CLS	LAND USE DESCRIPTION	CAP	RD	LOC ZONE	FRONT	DEPTH	TOT LND UTS	UNIT TYPE	DT	DPTH FACT	% COND	TOT ADJ	UNIT PRICE	ADJ UNIT PRICE	LAND VALUE	OTHER ADJUSTMENTS AND NOTES	YEAR	DENSITY	DECL	FRZ	YR	CONSRV
1	000115	C	SFR ACRES	100	0005	OR	0.00	0.00	5.06	AC		1.00	1.00	1.00	19,000.00	19,000.00	96,140							

REVIEW DATE 06/05/2020 BY TWA Total Acres: 5.06 Total Land Value: 96,140 Market: 0 Agricultural: 0 Common: 96,140 PRINTED 08/06/2024 BY SYS