PT LOT 26 IN OR 2472/865
CORNWALL SURVEY SEC 20-3N-24E
ESMT IN OR 2563-1617

OYLER SARAH JUNE & SCOTT T
15642 CR 108
HILLIARD, FL 32046

2024

20-3N-24-2020-0026-0020

BUILDING CHARACTERISTICS

ELEMENT	CD	CONSTRUCTION
Exterior Wall	31	HARDIE BRD 100
Roof Structur	03	GABLE/HIP 100
Roof Cover	03	COMP SHNGL 100
Interior Wall	05	DRYWALL 100
Interior Floo	13	LVT/LAMNT 60
Interior Floo	14	CARPET 40
Air Condition	03	CENTRAL 100
Heating Type	04	AIR DUCTED 100
Bedrooms		4 100
Bathrooms		2.5 100
Frame	02	WOOD FRAME 100
Stories	2.	2. 100
Units		0 100
Quality	03	Quality Level 03
DOR CODE	0100	SINGLE FAMILY
MAP NUM		MKT AREA 09
NEIGHBORHOOD/LOC	9001.00	

AREA TYPE	TOTAL GROSS AREA	PCT OF BASE	TOT ADJ AREA	SUBAREA MARKET VALUE
BAS	2,096	100	2,096	258,395
FOP	60	30	18	2,219
FSP	372	40	149	18,369
FUS	792	100	792	97,638
STR	48	10	5	616
TOTALS	3,368		3,060	377,237

MARKET ADJUSTMENTS

TYPE	MDL	EFF. AREA	TOT ADJ PTS	EFF. BASE RATE	REPL. COST NEW	AYB	EYB	ECON	FNCT		NORM	% COND
0900	01	3,060	98.6240	123.28	377,237	2023	2023	0	0	0	0.00	100.00

1 SNGL FAM – 0% - 2024 Heated Area: 2888 HX Base Yr

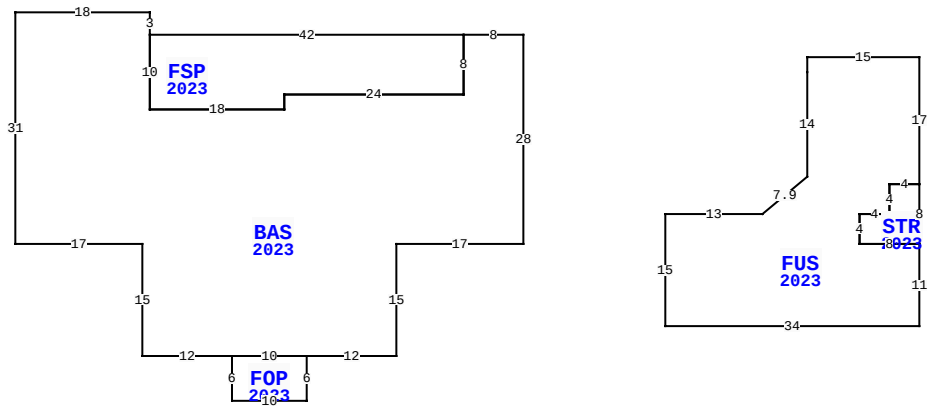

CR 108, HILLIARD

BLD DATE		LGL DATE	
XF DATE		LAND DATE	06/14/2023 MLU
INC DATE		AG DATE	

NASSAU COUNTY PROPERTY

PAGE 1 of 1 4

VALUATION SUMMARY

VALUATION BY	STANDARD
Tax Group: 4	Tax Dist:
BUILDING MARKET VALUE	377,237
TOTAL MARKET OB/XF VALUE	5,000
TOTAL LAND VALUE - MARKET	123,750
TOTAL MARKET VALUE	505,987
SOH/AGL Deduction	33,907
ASSESSED VALUE	472,080
TOTAL EXEMPTION VALUE	0
BASE TAXABLE VALUE	472,080
TOTAL JUST VALUE	505,987
NCON VALUE	382,237
INCOME VALUE	
PREVIOUS YEAR MKT VALUE	123,750

PERMIT NUM	DESCRIPTION	AMT	ISSUED
B24000731	24X65 STORAGE BUI		01/22/2024
230004898			04/17/2023
22005350	NEW CONSTR	446,028	04/06/2022

SALES DATA

OFF RECORD Number	DATE	TYPE INST	Q / U	V / I	RSN CD	SALE PRICE
2472/0865	6/22/2021	QC	U	V	11	100

GRANTOR: TITTLE STARLENE A

GRANTEE: OYLER SARAH JUNE &

BUILDING NOTES

BUILDING DIMENSIONS

BAS=[YR=2023;ORIG=70,10] W8 S8 W24 S2 W18 N10 N3 W18 S31 E17 S15 E12 E10 E12 N15 E17 N28 $
FUS=[YR=2023;ORIG=123,13] W15 S2 S14 D5L6 W13 S15 E34 N11 W8 N4 E4 N4 E4 N17 $
FSP=[YR=2023;ORIG=62,10] W42 S10 E18 N2 E24 N8 $
FOP=[YR=2023;ORIG=41,53] W10 S6 E10 N6 $
STR=[YR=2023;ORIG=123,30] W4 S4 W4 S4 E8 N8 $
.

EXTRA FEATURES

LN	OB/XF CODE	DESCRIPTION	BLD	CAP	L	W	UNITS	UT	Adj R	ADJ UNIT PRICE	ORIG COND	YEAR ON	YEAR ACTUAL	Q	% COND	OB/XF MKT VALUE	NOTES
1	0501	FP-AVERAGE	0	0	0	0	1.00	UT	5,000.00	5,000.00	100	2024	2023		100	5,000	

LAND DESCRIPTION

TOTAL OB/XF 5,000

LN	USE CODE	CLS	LAND USE DESCRIPTION	CAP	RD	LOC ZONE	FRONT	DEPTH	TOT LND UTS	UNIT TYPE	DT	DPTH FACT	% COND	TOT ADJ	UNIT PRICE	ADJ UNIT PRICE	LAND VALUE	OTHER ADJUSTMENTS AND NOTES	YEAR	DENSITY	DECL	FRZ	YR	CONSRV
1	000115	C	SFR ACRES	0		OR	0.00	0.00	4.95	AC		1.00	1.00	1.00	25,000.00	25,000.00	123,750							

REVIEW DATE 06/14/2023 BY MLU Total Acres: 4.95 Total Land Value: 123,750 Market: 0 Agricultural: 0 Common: 123,750 PRINTED 08/06/2024 BY SYS