PT TRACT A IN OR 2342/574
AMERICAN BEACH 3 PBK 2/64

HARRISON PARK SUITES LLC
P O BOX 16987
FERNANDINA BEACH, FL 32035-3105

2024

20-2N-28-0000-0004-0000

BUILDING CHARACTERISTICS

ELEMENT	CD	CONSTRUCTION
Exterior Wall	15	CONC BLOCK 90
Exterior Wall	12	CEDAR 10
Roof Structur	04	WOOD TRUSS 100
Roof Cover	03	COMP SHNGL 100
Interior Wall	05	DRYWALL 100
Interior Floo	14	CARPET 80
Interior Floo	11	CLAY TILE 20
Ceiling	02	F.NOT SUS 100
Air Condition	03	CENTRAL 100
Heating Type	04	AIR DUCTED 100
Fixtures		9 100
Frame	03	MASONRY 100
Story Height		8 100
RMS		24 100
Stories	1.	1. 100
Units		0 100
BUD8 Adjustme	05	DIST 1A 100
Occupancy	00	NONE 100
Quality	04	Quality Level 04
DOR CODE	1700	OFFICE BUILDINGS
MAP NUM		MKT AREA 03
NEIGHBORHOOD/LOC	3016.00	

AREA TYPE	TOTAL GROSS AREA	PCT OF BASE	TOT ADJ AREA	SUBAREA MARKET VALUE
BAS	2,500	100	2,500	309,278
BAS	80	100	80	9,897
BAS	205	100	205	25,361
BAS	1,936	100	1,936	239,505
BAS	64	100	64	7,917
CAN	21	30	6	742
CAN	28	30	8	990
CAN	30	30	9	1,114
CAN	40	30	12	1,484
CAN	46	30	14	1,732
TOTALS	5,542		5,011	619,916

MARKET ADJUSTMENTS

TYPE	MDL	EFF. AREA	TOT ADJ PTS	EFF. BASE RATE	REPL. COST NEW	AYB	EYB	ECON	FNCT		NORM	% COND
1701	04	5,011	101.4849	143.85	720,832	1981	2005	0	0	0	14.00	86.00

1 OFFICE 1&2 – 0% - 0 Heated Area: 4785 HX Base Yr

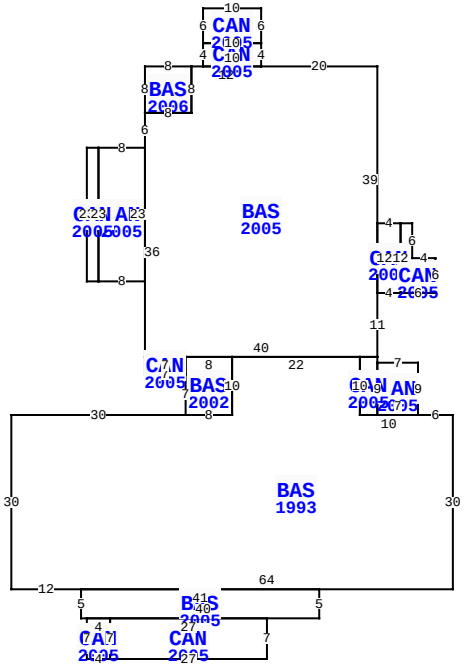

** This building has 16 Sub-Areas

5542 FIRST COAST HWY, FERNANDINA BEACH

BLD DATE	03/25/2019	KK	LGL DATE		
XF DATE	03/25/2019	KK	LAND DATE	03/25/2019	KK
INC DATE			AG DATE		

NASSAU COUNTY PROPERTY

PAGE 1 of 2 8

VALUATION SUMMARY

VALUATION BY	STANDARD
Tax Group: 8	Tax Dist:
BUILDING MARKET VALUE	1,269,474
TOTAL MARKET OB/XF VALUE	70,704
TOTAL LAND VALUE - MARKET	316,358
TOTAL MARKET VALUE	1,656,536
SOH/AGL Deduction	196,106
ASSESSED VALUE	1,460,430
TOTAL EXEMPTION VALUE	0
BASE TAXABLE VALUE	1,460,430
TOTAL JUST VALUE	1,656,536
NCON VALUE	0
INCOME VALUE	
PREVIOUS YEAR MKT VALUE	1,674,877

PERMIT NUM	DESCRIPTION	AMT	ISSUED
B0618576	ADDITION	1,500	10/31/2006
M09290	MECH OTHER	0	02/01/2005
B12640	ADDITION	0	04/01/2004
B0412639	NEW CONSTR	359,100	04/01/2004
R046038	REPAIR/RRF	2,520	04/01/2004
E018318	CHNGE SRVC	3,000	07/01/2001

SALES DATA

OFF RECORD Number	DATE	TYPE INST	Q / U	V / I	RSN CD	SALE PRICE
2342/0574	2/27/2020	SW	Q	I	01	1,500,000
GRANTOR: LANE BROTHERS PROPERT						
GRANTEE: HARRISON PARK SUITE						
1007/1398	8/31/2001	QC	U	V	06	100
GRANTOR: WALTERS JUDITH						
GRANTEE: LANE BROTHERS PROPE						

BUILDING NOTES

BUILDING DIMENSIONS

BAS=[YR=2005] W20 CAN=[YR=2005] N4 CAN=[YR=2005] N6 W10 S6 E10 $ W10 S4 E10 $ W12 BAS=[YR=2006] W8 S8 E8 N8 $ S8 W8 S6 CAN=[YR=2005] W8 CAN=[YR=2005] W2 S23 E2 N23 $ S23 E8 N23 $ S36 CAN=[YR=2005] S3 E7 BAS=[YR=2002] S7 BAS=[YR=1993] W30 S30 E12 BAS=[YR=2005] S5 E1 CAN=[YR=2005] S7 E4 CAN=[YR=2005] E27 N7 W27 S7 $ N7 W4 $ E40 N5 W41 $ E64 N30W6 CAN=[YR=2005] N9 W7 CAN=[YR=2005] N1 W3 S10 E3 N9 $ S9 E7 $ W10 N10 W22 S10 W8 $ E8 N10 W8 S3 $ N3 W7 $ E40 N11 CAN=[YR=2005] E4 CAN=[YR=2005] E6 N6 W4 N6 W2 S12 $ N12 W4 S12 $ N39 $.

EXTRA FEATURES

LN	OB/XF CODE	DESCRIPTION	BLD	CAP	L	W	UNITS	UT	Adj R	ADJ UNIT PRICE	ORIG COND	YEAR ON	YEAR ACTUAL	Q	% COND	OB/XF MKT VALUE	NOTES
1	0803	ASPHALT C	0	0	0	0	15,941.00	SF	2.00	2.00	100	2005	2005	3	56	17,854	
2	0400	CONC CURB	0	0	0	0	245.00	LF	15.00	15.00	100	2005	2005	3	89	3,271	
3	0402	CONC BUMPE	0	0	0	0	27.00	UT	25.00	25.00	100	2005	2005	3	89	601	
4	0855	CONC PAVER	0	0	0	0	1,052.00	SF	10.00	10.00	100	2005	2005	3	86	9,047	
5	0855	CONC PAVER	0	0	7	3	21.00	SF	10.00	10.00	100	2005	2005	3	86	181	
6	0811	CONCRETE B	0	0	0	0	790.00	SF	5.20	5.20	100	2005	2005	3	86	3,533	
7	0446	BOX FNC 6'	0	0	0	0	41.00	LF	20.00	20.00	100	2005	2005	3	24	197	
8	0972	ST LGHT UN	0	0	0	0	5.00	UT	2,530.00	2,530.00	100	2005	2005	3	66	8,349	
9	0810	CONCRETE A	0	0	0	0	259.00	SF	6.50	6.50	100	2005	2005	3	86	1,448	
10	0810	CONCRETE A	0	0	9	9	81.00	SF	6.50	6.50	100	2005	2005	3	86	453	

TOTAL OB/XF 44,934

LAND DESCRIPTION

LN	USE CODE	CLS	LAND USE DESCRIPTION	CAP	RD	LOC ZONE	FRONT	DEPTH	TOT LND UTS	UNIT TYPE	DT	DPTH FACT	% COND	TOT ADJ	UNIT PRICE	ADJ UNIT PRICE	LAND VALUE	OTHER ADJUSTMENTS AND NOTES	YEAR	DENSITY	DECL	FRZ	YR	CONSRV
1	001700	C	1STORY OFF	0	0006	CN	104.00	275.00	28,750.00	SF		1.00	1.00	1.00	7.00	7.00	201,250							
2	001700	C	1STORY OFF	0	0006	CN	0.00	0.00	16,444.00	SF		1.00	1.00	1.00	7.00	7.00	115,108							

REVIEW DATE 03/25/2019 BY KK Total Acres: 0.00 Total Land Value: 316,358 Market: 0 Agricultural: 0 Common: 316,358 PRINTED 08/06/2024 BY SYS

PT TRACT A IN OR 2342/574
AMERICAN BEACH 3 PBK 2/64

HARRISON PARK SUITES LLC
P O BOX 16987
FERNANDINA BEACH, FL 32035-3105

2024

20-2N-28-0000-0004-0000

BUILDING CHARACTERISTICS

ELEMENT	CD	CONSTRUCTION
Exterior Wall	10	ABOVE AVG 50
Exterior Wall	17	CB STUCCO 50
Roof Structur	04	WOOD TRUSS 100
Roof Cover	03	COMP SHNGL 100
Interior Wall	05	DRYWALL 100
Interior Floo	14	CARPET 80
Interior Floo	11	CLAY TILE 20
Ceiling	01	FIN.SUSPD 100
Air Condition	03	CENTRAL 100
Heating Type	04	AIR DUCTED 100
Fixtures		9 100
Frame	03	MASONRY 100
Story Height		11 100
RMS		13 100
Stories	2.	2. 100
Units		0 100
Occupancy	00	NONE 100
Quality	04	Quality Level 04
DOR CODE	1700	OFFICE BUILDINGS
MAP NUM		MKT AREA 03
NEIGHBORHOOD/LOC	3016.00	

AREA TYPE	TOTAL GROSS AREA	PCT OF BASE	TOT ADJ AREA	SUBAREA MARKET VALUE
BAS	2,150	100	2,150	298,281
CAN	90	30	27	3,746
CAN	120	30	36	4,995
FST	64	50	32	4,439
FST	90	50	45	6,243
FUS	2,356	100	2,356	326,860
PTO	100	5	5	694
PTO	100	5	5	694
UST	64	40	26	3,607
TOTALS	5,134		4,682	649,558

MARKET ADJUSTMENTS

TYPE	MDL	EFF. AREA	TOT ADJ PTS	EFF. BASE RATE	REPL. COST NEW	AYB	EYB	ECON	FNCT		NORM	% COND
1701	04	4,682	113.8045	161.32	755,300	2005	2005	0	0	0	14.00	86.00

2 OFFICE 1&2 – 0% - 0 Heated Area: 4506 HX Base Yr

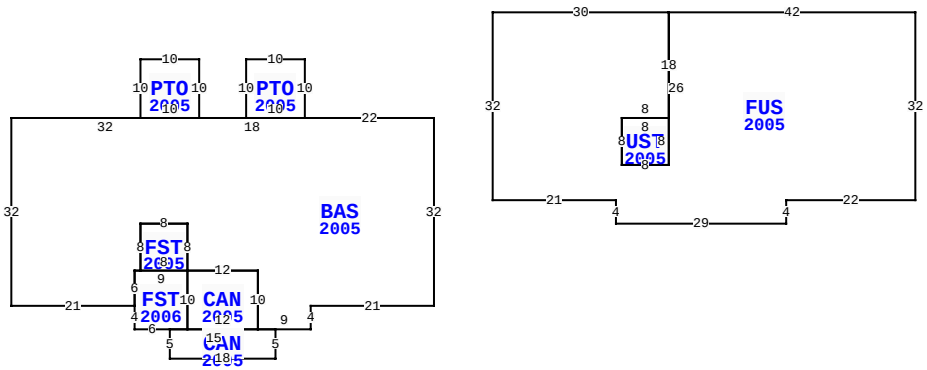

5542 FIRST COAST HWY, FERNANDINA BEACH

BLD DATE	03/25/2019	KK	LGL DATE		
XF DATE	03/25/2019	KK	LAND DATE	03/25/2019	KK
INC DATE			AG DATE		

NASSAU COUNTY PROPERTY

PAGE 2 of 2 8

VALUATION SUMMARY

VALUATION BY	STANDARD
Tax Group: 8	Tax Dist:
BUILDING MARKET VALUE	1,269,474
TOTAL MARKET OB/XF VALUE	70,704
TOTAL LAND VALUE - MARKET	316,358
TOTAL MARKET VALUE	1,656,536
SOH/AGL Deduction	196,106
ASSESSED VALUE	1,460,430
TOTAL EXEMPTION VALUE	0
BASE TAXABLE VALUE	1,460,430
TOTAL JUST VALUE	1,656,536
NCON VALUE	0
INCOME VALUE	
PREVIOUS YEAR MKT VALUE	1,674,877

PERMIT NUM	DESCRIPTION	AMT	ISSUED
R013427	REPAIR/RRF	0	07/01/2001

SALES DATA

OFF RECORD Number	DATE	TYPE INST	Q U	V I	RSN CD	SALE PRICE
2342/0574	2/27/2020	SW	Q	I	01	1,500,000
GRANTOR: LANE BROTHERS PROPERT						
GRANTEE: HARRISON PARK SUITE						
1007/1398	8/31/2001	QC	U	V	06	100
GRANTOR: WALTERS JUDITH						
GRANTEE: LANE BROTHERS PROPE						

BUILDING NOTES

BUILDING DIMENSIONS

BAS=[YR=2005] W22 PTO=[YR=2005] N10 W10 S10 E10 $ W18 PTO=[YR=2005] N10 W10 S10 E10 $ W32 S32 E21 FST=[YR=2006] S4 E6 CAN=[YR=2005] S5 E18 N5 W3 CAN=[YR=2005] N10 W12 FST=[YR=2005] N8 W8 S8 E8 $ S10 E12 $ W15 $ E3 N10 W9 S6 $ N6 E1 N8 E8 S8 E12 S10 E9 N4 E21 N32 $ PTR= E40 UST=[YR=2005] W8 S8 E8 N8$ FUS=[YR=2005] N18 W30 S32 E21 S4 E29 N4 E22 N32 W42 S26 W8 N8 E8$ W40$.

EXTRA FEATURES

LN	OB/XF CODE	DESCRIPTION	BLD	CAP	L	W	UNITS	UT	Adj R	ADJ UNIT PRICE	ORIG COND	YEAR ON	YEAR ACTUAL	Q	% COND	OB/XF MKT VALUE	NOTES
11	0463	FENCE GATE	0	0	0	0	2.00	UT	300.00	300.00	100	2005	2005	3	66	396	
12	0410	ELEVATOR	0	0	0	0	1.00	UT	25,000.00	25,000.00	100	2005	2005	3	100	25,000	
13	0097	AWNING CN	0	0	0	0	12.00	SF	65.00	65.00	100	2007	2007	3	48	374	

LAND DESCRIPTION

TOTAL OB/XF 25,770

LN	USE CODE	CLS	LAND USE DESCRIPTION	CAP	RD	LOC ZONE	FRONT	DEPTH	TOT LND UTS	UNIT TYPE	DT	DPTH FACT	% COND	TOT ADJ	UNIT PRICE	ADJ UNIT PRICE	LAND VALUE	OTHER ADJUSTMENTS AND NOTES	YEAR	DENSITY	DECL	FRZ	YR	CONSRV

REVIEW DATE 03/25/2019 BY KK Total Acres: 0.00 Total Land Value: 316,358 Market: 0 Agricultural: 0 Common: 316,358 PRINTED 08/06/2024 BY SYS