LOT 58
CRANE ISLAND PHASE 2A
OR 2270/910

WINTER GREGG & ELLEN
4020 HOWELL ROAD
MALVERN, PA 19355

2024

19-2N-28-1000-0058-0000

NASSAU COUNTY PROPERTY

BUILDING CHARACTERISTICS

ELEMENT	CD	CONSTRUCTION
Exterior Wall	31	HARDIE BRD 100
Roof Structur	08	IRREGULAR 100
Roof Cover	13	STAND SEAM 100
Interior Wall	05	DRYWALL 100
Interior Floo	12	HARDWOOD 100
Air Condition	03	CENTRAL 100
Heating Type	04	AIR DUCTED 100
Bedrooms		5 100
Bathrooms		4.5 100
Frame	02	WOOD FRAME 100
Stories	2.	2. 100
Quality	04	Quality Level 04

DOR CODE	0100	SINGLE FAMILY	
MAP NUM		MKT AREA	01
NEIGHBORHOOD/LOC	2036.0100		

AREA TYPE	TOTAL GROSS AREA	PCT OF BASE	TOT ADJ AREA	SUBAREA MARKET VALUE
BAL	171	15	26	12,575
BAS	1,832	100	1,832	886,047
FCP	170	25	42	20,313
FDG	612	60	367	177,500
FOP	457	30	137	66,260
FSP	215	40	86	41,594
FSP	338	40	135	65,293
FUS	380	100	380	183,787
FUS	1,396	100	1,396	675,175
STR	60	10	6	2,902
TOTALS	5,822		4,436	2,145,471

MARKET ADJUSTMENTS

TYPE	MDL	EFF. AREA	TOT ADJ PTS	EFF. BASE RATE	REPL. COST NEW	AYB	EYB	ECON	FNCT		NORM	% COND
0500	22	4,436	322.4312	483.65	2,145,471	2023	2023	0	0	0	0.00	100.00

1 SFR CUST – 0% - 2024 Heated Area: 3608 HX Base Yr

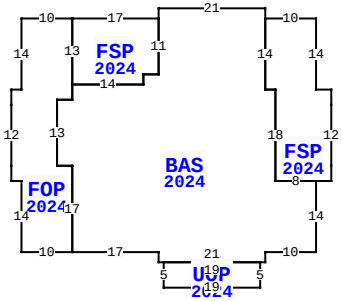

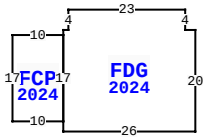

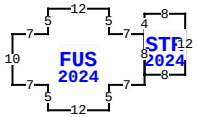

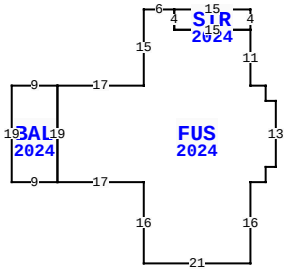

** This building has 12 Sub-Areas

56 WALLAN CT, FERNANDINA BEACH

BLD DATE		LGL DATE	
XF DATE		LAND DATE	
INC DATE		AG DATE	

VALUATION SUMMARY

VALUATION BY	STANDARD
Tax Group: 2	Tax Dist:
BUILDING MARKET VALUE	2,145,471
TOTAL MARKET OB/XF VALUE	41,438
TOTAL LAND VALUE - MARKET	500,000
TOTAL MARKET VALUE	2,686,909
SOH/AGL Deduction	0
ASSESSED VALUE	2,686,909
TOTAL EXEMPTION VALUE	0
BASE TAXABLE VALUE	2,686,909
TOTAL JUST VALUE	2,686,909
NCON VALUE	2,186,909
INCOME VALUE	
PREVIOUS YEAR MKT VALUE	500,000

PERMIT NUM	DESCRIPTION	AMT	ISSUED
20200596	NEW CONSTR	0	11/05/2020

SALES DATA

OFF RECORD Number	DATE	TYPE INST	Q / U	V / I	RSN CD	SALE PRICE
2309/0788	9/30/2019	WD	Q	V	01	460,000

GRANTOR: CRANE ISLAND MODEL HO

GRANTEE: WINTER GREGG & ELLE

BUILDING NOTES

BUILDING DIMENSIONS

BAS=[YR=2024;ORIG=0,0] E17 S2 E21 N2 E10 N14 W8 N18 W2 N14 N2 W21 S2 S11 W3 S2 W14 S3 W3 S13 E3 S17 $
FOP=[YR=2024;ORIG=0,0] W10 N14 W2 N3 N12 N3 E2 N14 E10 S13 S3 W3 S13 E3 S17 $
FSP=[YR=2024;ORIG=0,-46] E17 S11 W3 S2 W14 N13 $
FSP=[YR=2024;ORIG=38,-46] E10 S14 E3 S3 S12 S3 W3 W8 N18 W2 N14 $
UOP=[YR=2024;ORIG=18,2] S5 E19 N5 W19 $
FUS=[YR=2024;ORIG=40,34] W15 N4 W6 S15 W17 S19 E17 S16 E21 N16 E3 N3 E2 N13 W2 N3 W3 N11 $
STR=[YR=2024;ORIG=25,30] E15 S4 W15 N4 $
BAL=[YR=2024;ORIG=-7,45] E9 S19 W9 N19 $

EXTRA FEATURES

LN	OB/XF CODE	DESCRIPTION	BLD	CAP	L	W	UNITS	UT	Adj R	ADJ UNIT PRICE	ORIG COND	YEAR ON	YEAR ACTUAL	Q	% COND	OB/XF MKT VALUE	NOTES
1	0825	BRICK	0	0	0	0	1,715.00	SF	12.50	12.50	100	2024	2023		100	21,438	
2	0502	FP-CUSTOM	0	0	0	0	2.00	UT	10,000.00	10,000.00	100	2024	2023		100	20,000	

LAND DESCRIPTION

TOTAL OB/XF 41,438

LN	USE CODE	CLS	LAND USE DESCRIPTION	CAP	RD	LOC ZONE	FRONT	DEPTH	TOT LND UTS	UNIT TYPE	DT	DPTH FACT	% COND	TOT ADJ	UNIT PRICE	ADJ UNIT PRICE	LAND VALUE	OTHER ADJUSTMENTS AND NOTES	YEAR	DENSITY	DECL	FRZ	YR	CONSRV
1	000100	C	SFR	0		R-1	0.00	0.00	1.00	LT		1.00	1.00	1.00	500,000.00	500,000.00	500,000							

REVIEW DATE 02/05/2024 BY HS Total Acres: 0.00 Total Land Value: 500,000 Market: 0 Agricultural: 0 Common: 500,000 PRINTED 08/06/2024 BY SYS