LOT 49
CRANE ISLAND PHASE 2A
OR 2270/910

GROVER WILLIAM H TRUST/GROVER WILLIAM H TRUSTEE
105 BROADBENT WAY
FERNANDINA BEACH, FL 32034

**2024**

**19-2N-28-1000-0049-0000**

## NASSAU COUNTY PROPERTY



## BUILDING CHARACTERISTICS

| ELEMENT | CD | CONSTRUCTION |
|---|---|---|
| Exterior Wall | 10 | ABOVE AVG 100 |
| Roof Structur | 08 | IRREGULAR 100 |
| Roof Cover | 13 | STAND SEAM 100 |
| Interior Wall | 05 | DRYWALL 100 |
| Interior Floo | 12 | HARDWOOD 70 |
| Interior Floo | 15 | HARDTILE 30 |
| Air Condition | 03 | CENTRAL 100 |
| Heating Type | 04 | AIR DUCTED 100 |
| Bedrooms | | 4 100 |
| Bathrooms | | 5.5 100 |
| Frame | 02 | WOOD FRAME 100 |
| Stories | 0 | 0 100 |
| Units | | 0 100 |
| Quality | 04 | Quality Level 04 |

DOR CODE 0100 SINGLE FAMILY
MAP NUM | MKT AREA 01
NEIGHBORHOOD/LOC 2036.0100

| AREA TYPE | TOTAL GROSS AREA | PCT OF BASE | TOT ADJ AREA | SUBAREA MARKET VALUE |
|---|---|---|---|---|
| BAL | 135 | 15 | 20 | 12,483 |
| BAL | 230 | 15 | 34 | 21,221 |
| BAL | 276 | 15 | 41 | 25,590 |
| BAS | 1,524 | 100 | 1,524 | 951,189 |
| FDG | 648 | 60 | 389 | 242,790 |
| FOP | 70 | 30 | 21 | 13,107 |
| FOP | 204 | 30 | 61 | 38,073 |
| FOP | 276 | 30 | 83 | 51,804 |
| FUS | 513 | 100 | 513 | 320,184 |
| FUS | 1,173 | 100 | 1,173 | 732,116 |
| TOTALS | 5,211 | | 3,875 | 2,418,542 |

## MARKET ADJUSTMENTS

| TYPE | MDL | EFF. AREA | TOT ADJ PTS | EFF. BASE RATE | REPL. COST NEW | AYB | EYB | ECON | FNCT | | NORM | % COND |
|---|---|---|---|---|---|---|---|---|---|---|---|---|
| 0500 | 22 | 3,875 | 416.0957 | 624.14 | 2,418,542 | 2022 | 2022 | 0 | 0 | 0 | 0.00 | 100.00 |

1 SFR CUST – 100% - 2023 Heated Area: 3210 HX Base Yr 2023

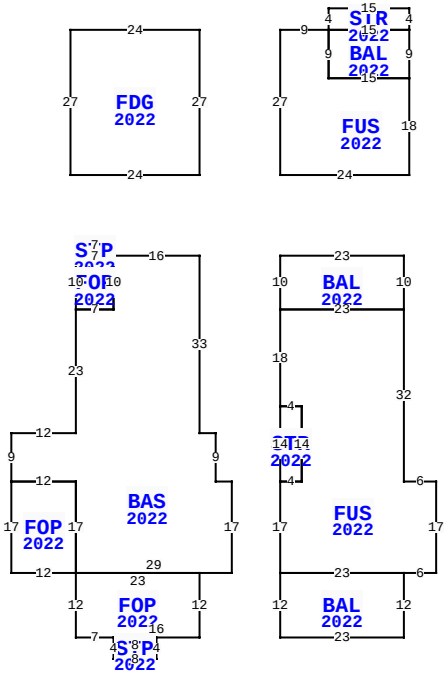


** This building has 14 Sub-Areas

105 BROADBENT WAY, FERNANDINA BEACH

| | | | |
|---|---|---|---|
| BLD DATE | | LGL DATE | |
| XF DATE | | LAND DATE | |
| INC DATE | | AG DATE | |

## VALUATION SUMMARY

| | | |
|---|---|---|
| VALUATION BY | | STANDARD |
| Tax Group: 2 | Tax Dist: | |
| BUILDING MARKET VALUE | | 2,418,542 |
| TOTAL MARKET OB/XF VALUE | | 29,681 |
| TOTAL LAND VALUE - MARKET | | 350,000 |
| TOTAL MARKET VALUE | | 2,798,223 |
| SOH/AGL Deduction | | 1,272,375 |
| ASSESSED VALUE | | 1,525,848 |
| TOTAL EXEMPTION VALUE | HX HB | 50,000 |
| BASE TAXABLE VALUE | | 1,475,848 |
| TOTAL JUST VALUE | | 2,798,223 |
| NCON VALUE | | 0 |
| INCOME VALUE | | |
| PREVIOUS YEAR MKT VALUE | | 1,481,406 |

| PERMIT NUM | DESCRIPTION | AMT | ISSUED |
|---|---|---|---|
| 20211039 | CO ISSUED | 0 | 12/08/2023 |
| 20211039 | NEW CONSTR | 0 | 04/22/2021 |

## SALES DATA

| OFF RECORD Number | DATE | TYPE INST | Q / U | V / I | RSN CD | SALE PRICE |
|---|---|---|---|---|---|---|
| 2404/0585 | 10/28/2020 | WD | Q | V | 02 | 370,000 |

GRANTOR: THE RANGE AT CRANE IS
GRANTEE: GROVER WILLIAM H TR

## BUILDING NOTES

## BUILDING DIMENSIONS

BAS=[YR=2022] W16 STP=[YR=2022] N2 W7 S2 FOP=[YR=2022] S10 E7 N10 W7$ E7$ S10 W7 S23 W12 S9 FOP=[YR=2022] S17 E12 N17 W12$ E12 S17 FOP=[YR=2022] S12 E7 STP=[YR=2022] S4 E8 N4 W8$ E16 N12 W23$ E29 N17 W3 N9 W3 N33$ PTR=N15 FDG=[YR=2022] N27 W24 S27 E24$ E15 FUS=[YR=2022] E24 N18 BAL=[YR=2022] N9 STR=[YR=2022] N4 W15 S4 E15$ W15 S9 E15$ W15 N9 W9 S27 $ S15 BAL=[YR=2022] E23 S10 FUS=[YR=2022] S32 E6 S17 W6 BAL=[YR=2022] S12 W23 N12 E23$ W23 N17 STR=[YR=2022] N14 E4 S14 W4$ E4 N14 W4 N18 E23$ W23 N10$ N15 W15 S15$.

## EXTRA FEATURES

| LN | OB/XF CODE | DESCRIPTION | BLD | CAP | L | W | UNITS | UT | Adj R | ADJ UNIT PRICE | ORIG COND | YEAR ON | YEAR ACTUAL | Q | % COND | OB/XF MKT VALUE | NOTES |
|---|---|---|---|---|---|---|---|---|---|---|---|---|---|---|---|---|---|
| 1 | 0409 | ELEVATOR R | 0 | 100 | 0 | 0 | 1.00 | UT | 10,200.00 | 10,200.00 | 100 | 2022 | 2022 | 3 | 100 | 10,200 | |
| 2 | 0504 | FP-ELECTRI | 0 | 100 | 0 | 0 | 2.00 | UT | 2,000.00 | 2,000.00 | 100 | 2022 | 2022 | 3 | 100 | 4,000 | |
| 3 | 0855 | CONC PAVER | 0 | 100 | 0 | 0 | 1,237.00 | SF | 10.00 | 10.00 | 100 | 2022 | 2022 | 3 | 100 | 12,370 | |
| 4 | 1241 | WD DECK G | 0 | 100 | 0 | 0 | 276.00 | UT | 11.50 | 11.50 | 100 | 2022 | 2022 | 3 | 98 | 3,111 | |

## LAND DESCRIPTION

TOTAL OB/XF 29,681

| LN | USE CODE | CLS | LAND USE DESCRIPTION | CAP | RD | LOC ZONE | FRONT | DEPTH | TOT LND UTS | UNIT TYPE | DT | DPTH FACT | % COND | TOT ADJ | UNIT PRICE | ADJ UNIT PRICE | LAND VALUE | OTHER ADJUSTMENTS AND NOTES | YEAR | DENSITY | DECL | FRZ | YR | CONSRV |
|---|---|---|---|---|---|---|---|---|---|---|---|---|---|---|---|---|---|---|---|---|---|---|---|---|
| 1 | 000100 | C | SFR | 100 | | R-1 | 0.00 | 0.00 | 1.00 | LT | | 1.00 | 1.00 | 1.00 | 350,000.00 | 350,000.00 | 350,000 | | | | | | | |

REVIEW DATE 01/30/2023 BY TW Total Acres: 0.00 Total Land Value: 350,000 Market: 0 Agricultural: 0 Common: 350,000 PRINTED 08/06/2024 BY SYS