LOT 31
CRANE ISLAND PHASE 1 PB 8/308

KOLLEVOLL OLAV B JR & JUDITH M
65 BROADBENT WAY
FERNANDINA BEACH, FL 32034

2024

19-2N-28-1000-0031-0000

BUILDING CHARACTERISTICS

ELEMENT	CD	CONSTRUCTION
Exterior Wall	10	ABOVE AVG 100
Roof Structur	08	IRREGULAR 100
Roof Cover	13	STAND SEAM 100
Interior Wall	05	DRYWALL 100
Interior Floo	12	HARDWOOD 80
Interior Floo	11	CLAY TILE 20
Air Condition	03	CENTRAL 100
Heating Type	04	AIR DUCTED 100
Bedrooms		5 100
Bathrooms		5.5 100
Frame	02	WOOD FRAME 100
Stories	2.	2. 100
Units		0 100
Quality	04	Quality Level 04
DOR CODE	0100	SINGLE FAMILY
MAP NUM		MKT AREA 01
NEIGHBORHOOD/LOC	2036.0100	

AREA TYPE	TOTAL GROSS AREA	PCT OF BASE	TOT ADJ AREA	SUBAREA MARKET VALUE
BAS	2,259	100	2,259	1,345,223
FDG	552	60	331	197,109
FOP	56	30	17	10,124
FOP	224	30	67	39,898
FSP	360	40	144	85,751
FUS	433	100	433	257,849
FUS	988	100	988	588,349
STP	7	10	1	596
STP	30	10	3	1,787
STR	70	10	7	4,169
TOTALS	5,209		4,288	2,553,482

MARKET ADJUSTMENTS

TYPE	MDL	EFF. AREA	TOT ADJ PTS	EFF. BASE RATE	REPL. COST NEW	AYB	EYB	ECON	FNCT		NORM	% COND
0500	22	4,288	401.0042	601.51	2,579,275	2020	2020	0	0	0	1.00	99.00

1 SFR CUST – 100% - 2021 Heated Area: 3680 HX Base Yr 2021

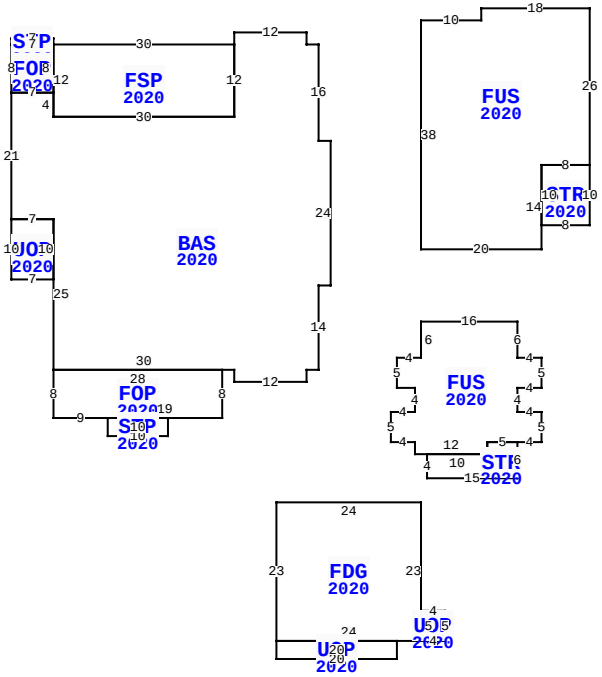

** This building has 14 Sub-Areas

65 BROADBENT WAY, FERNANDINA BEACH

BLD DATE		LGL DATE	
XF DATE		LAND DATE	
INC DATE		AG DATE	

NASSAU COUNTY PROPERTY

PAGE 1 of 1 2

VALUATION SUMMARY

VALUATION BY		STANDARD
Tax Group: 2	Tax Dist:	
BUILDING MARKET VALUE		2,553,482
TOTAL MARKET OB/XF VALUE		29,661
TOTAL LAND VALUE - MARKET		350,000
TOTAL MARKET VALUE		2,933,143
SOH/AGL Deduction		1,497,637
ASSESSED VALUE		1,435,506
TOTAL EXEMPTION VALUE	HX HB	50,000
BASE TAXABLE VALUE		1,385,506
TOTAL JUST VALUE		2,933,143
NCON VALUE		0
INCOME VALUE		
PREVIOUS YEAR MKT VALUE		1,790,143

PERMIT NUM	DESCRIPTION	AMT	ISSUED
20190265	CO ISSUED	0	02/28/2020
20190344	GARAGE	0	06/26/2019
20190265	NEW CONSTR	0	04/30/2019

SALES DATA

OFF RECORD Number	DATE	TYPE INST	Q U /	V I /	RSN CD	SALE PRICE
2347/1518	3/18/2020	WD	Q	I	01	1,590,000
GRANTOR: DREAM FINDERS HOMES L						
GRANTEE: KOLLEVOLL OLAV B JR						
2249/0626	12/20/2018	SW	Q	V	01	369,000
GRANTOR: THE RANGE AT CRANE IS						
GRANTEE: DREAM FINDERS HOMES						

BUILDING NOTES

BUILDING DIMENSIONS

BAS=[YR=2020] W2 N16 W2 N2 W12 S2 FSP=[YR=2020] W30 STP=[YR=2020] N1W7 S1 FOP=[YR=2020] S8 E7 N8 W7$ E7$ S12 E30 N12$ S12 W30 N4 W7S21 UOP=[YR=2020] S10 E7 N10 W7$ E7 S25 FOP=[YR=2020] S8 E9 STP=[YR=2020] S3 E10 N3 W10$ E19 N8 W28$ E30 S2 E12 N2 E2 N14 E2 N24$ PTR=E15 N20 FUS=[YR=2020] E10 N2 E18 S26 STR=[YR=2020] S10 W8 N10 E8$ W8 S14 W20 N38$ W15 S20$ PTR=E15 S30 FUS=[YR=2020] E16 S6 E4 S5 W4 S4 E4 S5 W4 STR=[YR=2020] S6 W15 N4 E10 N2 E5$ W5 S2 W12 N2 W4 N5 E4N4 W3 N5 E4 N6$ W15 N30$ PTR=E15 S60 FDG=[YR=2020] W24 S23 UOP=[YR=2020] S3 E20 N3 W20$ E24 UOP=[YR=2020] E4 N5 W4 S5$ N23$ W15 N60$.

EXTRA FEATURES

LN	OB/XF CODE	DESCRIPTION	BLD	CAP	L	W	UNITS	UT	Adj R	ADJ UNIT PRICE	ORIG COND	YEAR ON	YEAR ACTUAL	Q	% COND	OB/XF MKT VALUE	NOTES
1	0504	FP-ELECTRI	0	100	0	0	1.00	UT	2,000.00	2,000.00	100	2020	2020	3	99	1,980	
2	0855	CONC PAVER	0	100	0	0	2,412.00	SF	10.00	10.00	100	2020	2020	3	99	23,879	
3	0855	CONC PAVER	0	100	0	0	270.00	SF	10.00	10.00	100	2020	2020	3	99	2,673	
4	0855	CONC PAVER	0	100	0	0	114.00	SF	10.00	10.00	100	2020	2020	3	99	1,129	

LAND DESCRIPTION

TOTAL OB/XF 29,661

LN	USE CODE	CLS	LAND USE DESCRIPTION	CAP	RD	LOC ZONE	FRONT	DEPTH	TOT LND UTS	UNIT TYPE	DT	DPTH FACT	% COND	TOT ADJ	UNIT PRICE	ADJ UNIT PRICE	LAND VALUE	OTHER ADJUSTMENTS AND NOTES	YEAR	DENSITY	DECL	FRZ	YR	CONSRV
1	000100	C	SFR	100		R-1	0.00	0.00	1.00	LT		1.00	1.00	1.00	350,000.00	350,000.00	350,000							

REVIEW DATE 08/21/2020 BY DJ Total Acres: 0.00 Total Land Value: 350,000 Market: 0 Agricultural: 0 Common: 350,000 PRINTED 08/06/2024 BY SYS