LOT 5
CRANE ISLAND PHASE 1 PB 8/308

MAHONEY SARAH A/OLOFSON ERIC E
15 SWEETGRASS CT
FERNANDINA BEACH, FL 32034

2024

19-2N-28-1000-0005-0000

NASSAU COUNTY PROPERTY

BUILDING CHARACTERISTICS

ELEMENT	CD	CONSTRUCTION
Exterior Wall	10	ABOVE AVG 100
Roof Structur	08	IRREGULAR 100
Roof Cover	13	STAND SEAM 100
Interior Wall	05	DRYWALL 100
Interior Floo	12	HARDWOOD 90
Interior Floo	11	CLAY TILE 10
Air Condition	03	CENTRAL 100
Heating Type	04	AIR DUCTED 100
Bedrooms		3 100
Bathrooms		3.5 100
Frame	02	WOOD FRAME 100
Stories	0	0 100
Units		0 100
Quality	04	Quality Level 04

DOR CODE	0100	SINGLE FAMILY	
MAP NUM		MKT AREA	01
NEIGHBORHOOD/LOC	2036.0100		

AREA TYPE	TOTAL GROSS AREA	PCT OF BASE	TOT ADJ AREA	SUBAREA MARKET VALUE
BAS	1,575	100	1,575	1,029,026
DCK	72	10	7	4,573
FOP	102	30	31	20,254
FSP	55	40	22	14,374
FSP	601	40	240	156,804
FUS	841	100	841	549,467
STP	18	10	2	1,307
STP	24	10	2	1,307
STP	24	10	2	1,307
STR	64	10	6	3,920
TOTALS	3,376		2,728	1,782,339

MARKET ADJUSTMENTS

TYPE	MDL	EFF. AREA	TOT ADJ PTS	EFF. BASE RATE	REPL. COST NEW	AYB	EYB	ECON	FNCT		NORM	% COND
0500	22	2,728	435.5697	653.35	1,782,339	2022	2022	0	0	0	0.00	100.00

1 SFR CUST – 0% - 0 Heated Area: 2416 HX Base Yr

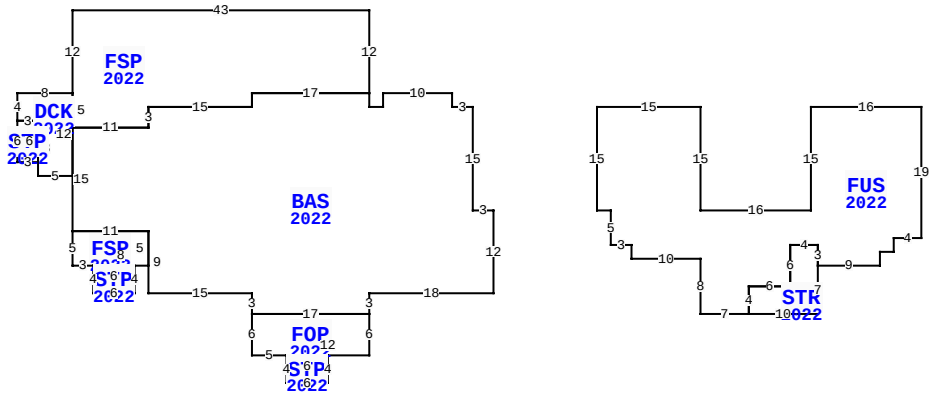

15 SWEETGRASS CT, FERNANDINA BEACH

BLD DATE		LGL DATE	
XF DATE		LAND DATE	05/30/2023 DC
INC DATE		AG DATE	

VALUATION SUMMARY

VALUATION BY	STANDARD
Tax Group: 2	Tax Dist:
BUILDING MARKET VALUE	1,969,106
TOTAL MARKET OB/XF VALUE	20,781
TOTAL LAND VALUE - MARKET	300,000
TOTAL MARKET VALUE	2,289,887
SOH/AGL Deduction	755,962
ASSESSED VALUE	1,533,925
TOTAL EXEMPTION VALUE	0
BASE TAXABLE VALUE	1,533,925
TOTAL JUST VALUE	2,289,887
NCON VALUE	0
INCOME VALUE	
PREVIOUS YEAR MKT VALUE	1,394,477

PERMIT NUM	DESCRIPTION	AMT	ISSUED
20211332	GARAGE	0	05/20/2021
20211280	NEW CONSTR	0	05/20/2021

SALES DATA

OFF RECORD Number	DATE	TYPE INST	Q U	V I	RSN CD	SALE PRICE
2701/1288	3/08/2024	WD	U	I	11	100
GRANTOR: CABIN TRUST						
GRANTEE: MAHONEY SARAH A						
2701/1133	3/08/2024	WD	Q	I	01	2,735,000
GRANTOR: CABIN TRUST						
GRANTEE: MAHONEY SARAH A						

BUILDING NOTES

BUILDING DIMENSIONS

BAS=[YR=2022] W3 N15 W3 N2 W10 S2 W2 N2 FSP=[YR=2022] N12 W43 S12 DCK=[YR=2022] W8 S4 STP=[YR=2022] S6 E3 N6 W3$ E3 S8 E5 N12$ S5 E11 N3 E15 N2 E17$ W17 S2 W15 S3 W11 S15 FSP=[YR=2022] S5 E3 STP=[YR=2022] S4 E6 N4 W6$ E8 N5 W11$ E11 S9 E15 S3 FOP=[YR=2022] S6 E5 STP=[YR=2022] S4 E6 N4 W6$ E12 N6 W17$ E17 N3 E18 N12$ PTR=E15 N15 FUS=[YR=2022] E15 S15 E16 N15 E16 S19 W4 S2 W2 S2 W9STR=[YR=2022] S7 W10 N4 E6 N6 E4 S3$ N3 W4 S6 W6 S4 W7 N8 W10 N2 W3 N5 W2N15 $ W15 S15$.

EXTRA FEATURES

LN	OB/XF CODE	DESCRIPTION	BLD	CAP	L	W	UNITS	UT	Adj R	ADJ UNIT PRICE	ORIG COND	YEAR ON	YEAR ACTUAL	Q	% COND	OB/XF MKT VALUE	NOTES
1	1243	WD DECK F	0	0	0	0	800.00	SF	8.00	8.00	100	2022	2022	3	97	6,208	
2	0810	CONCRETE A	0	0	0	0	265.00	SF	6.50	6.50	100	2022	2022	3	100	1,723	
3	0600	SUMMER KIT	0	0	0	0	1.00	UT	5,000.00	5,000.00	100	2022	2022	3	97	4,850	
4	0504	FP-ELECTRI	0	0	0	0	1.00	UT	6,000.00	6,000.00	100	2022	2022	3	100	6,000	
5	0504	FP-ELECTRI	0	0	0	0	1.00	UT	2,000.00	2,000.00	100	2022	2022	3	100	2,000	

LAND DESCRIPTION

TOTAL OB/XF 20,781

LN	USE CODE	CLS	LAND USE DESCRIPTION	CAP	RD	LOC ZONE	FRONT	DEPTH	TOT LND UTS	UNIT TYPE	DT	DPTH FACT	% COND	TOT ADJ	UNIT PRICE	ADJ UNIT PRICE	LAND VALUE	OTHER ADJUSTMENTS AND NOTES	YEAR	DENSITY	DECL	FRZ	YR	CONSRV
1	000000	C	VAC RES	0		R-1	0.00	0.00	1.00	LT		1.00	1.00	1.00	300,000.00	300,000.00	300,000							

REVIEW DATE 01/04/2023 BY TW Total Acres: 0.00 Total Land Value: 300,000 Market: 0 Agricultural: 0 Common: 300,000 PRINTED 08/06/2024 BY SYS

LOT 5
CRANE ISLAND PHASE 1 PB 8/308

MAHONEY SARAH A/OLOFSON ERIC E
15 SWEETGRASS CT
FERNANDINA BEACH, FL 32034

2024

19-2N-28-1000-0005-0000

NASSAU COUNTY PROPERTY

BUILDING CHARACTERISTICS

ELEMENT	CD	CONSTRUCTION
Exterior Wall	10	ABOVE AVG 100
Roof Structur	03	GABLE/HIP 100
Roof Cover	13	STAND SEAM 100
Interior Wall	05	DRYWALL 100
Interior Floo	03	CONC FINSH 60
Interior Floo	12	HARDWOOD 40
Air Condition	03	CENTRAL 100
Heating Type	04	AIR DUCTED 100
Bedrooms		1 100
Bathrooms		1 100
Frame	02	WOOD FRAME 100
Stories	0	0 100
Units		0 100
Quality	03	Quality Level 03
DOR CODE	0100	SINGLE FAMILY
MAP NUM		MKT AREA 01
NEIGHBORHOOD/LOC	2036.0100	

AREA TYPE	TOTAL GROSS AREA	PCT OF BASE	TOT ADJ AREA	SUBAREA MARKET VALUE
BAL	64	15	10	1,344
BAS	829	100	829	111,469
FUS	546	100	546	73,416
STR	40	10	4	538
TOTALS	1,479		1,389	186,767

MARKET ADJUSTMENTS

TYPE	MDL	EFF. AREA	TOT ADJ PTS	EFF. BASE RATE	REPL. COST NEW	AYB	EYB	ECON	FNCT		NORM	% COND
6500	22	1,389	388.0692	135.82	188,654	2022	2022	0	0	0	1.00	99.00

2 GARAGE RES – 0% - 0 Heated Area: 1375 HX Base Yr

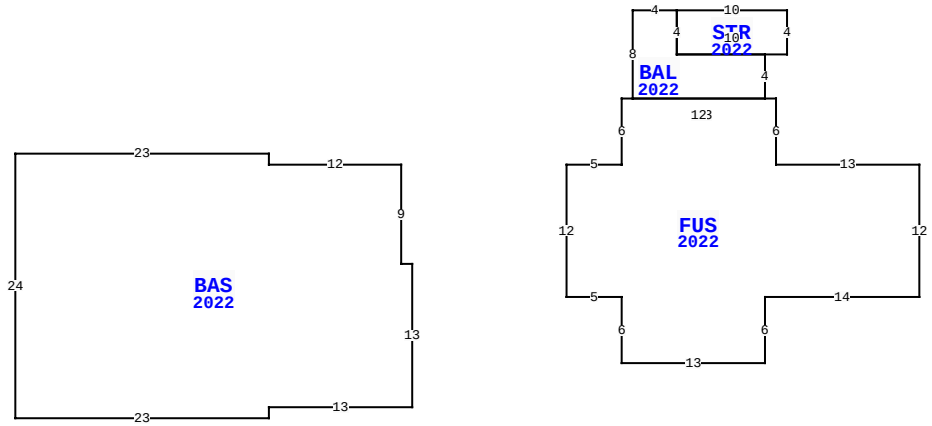

BLD DATE	
XF DATE	
INC DATE	
LGL DATE	
LAND DATE	05/30/2023 DC
AG DATE	

15 SWEETGRASS CT, FERNANDINA BEACH

VALUATION SUMMARY

VALUATION BY	STANDARD
Tax Group: 2	Tax Dist:
BUILDING MARKET VALUE	1,969,106
TOTAL MARKET OB/XF VALUE	20,781
TOTAL LAND VALUE - MARKET	300,000
TOTAL MARKET VALUE	2,289,887
SOH/AGL Deduction	755,962
ASSESSED VALUE	1,533,925
TOTAL EXEMPTION VALUE	0
BASE TAXABLE VALUE	1,533,925
TOTAL JUST VALUE	2,289,887
NCON VALUE	0
INCOME VALUE	
PREVIOUS YEAR MKT VALUE	1,394,477

PERMIT NUM	DESCRIPTION	AMT	ISSUED

SALES DATA

OFF RECORD Number	DATE	TYPE INST	Q U	V I	RSN CD	SALE PRICE
2701/1288	3/08/2024	WD	U	I	11	100
GRANTOR: CABIN TRUST						
GRANTEE: MAHONEY SARAH A						
2701/1133	3/08/2024	WD	Q	I	01	2,735,000
GRANTOR: CABIN TRUST						
GRANTEE: MAHONEY SARAH A						

BUILDING NOTES

BUILDING DIMENSIONS

BAS=[YR=2022] W12 N1 W23 S24 E23 N1 E13 N13 W1 N9$ PTR=E15
FUS=[YR=2022] E5 N6 E1 BAL=[YR=2022] N8 E4 STR=[YR=2022] E10 S4 W10 N4$ S4 E8 S4 W12$ E13 S6 E13 S12 W14 S6 W13 N6 W5 N12$ W15$.

EXTRA FEATURES

L N	OB/XF CODE	DESCRIPTION	BLD	CAP	L	W	UNITS	UT	Adj R	ADJ UNIT PRICE	ORIG COND	YEAR ON	YEAR ACTUAL	Q	% COND	OB/XF MKT VALUE	NOTES

LAND DESCRIPTION

TOTAL OB/XF 0

L N	USE CODE	CLS	LAND USE DESCRIPTION	CAP	R D	LOC ZONE	FRONT	DEPTH	TOT LND UTS	UNIT TYPE	D T	DPTH FACT	% COND	TOT ADJ	UNIT PRICE	ADJ UNIT PRICE	LAND VALUE	OTHER ADJUSTMENTS AND NOTES	YEAR	DENSITY	DECL	FRZ	YR	CONSRV

REVIEW DATE 01/04/2023 BY TW Total Acres: 0.00 Total Land Value: 300,000 Market: 0 Agricultural: 0 Common: 300,000 PRINTED 08/06/2024 BY SYS