PT OF NW1/4 OF SE1/4
IN OR 633 PG 885

GIDDENS DARRELL H & MARTHA V
8483 GIDDENS LANE
BRYCEVILLE, FL 32009

2024

19-1S-23-0000-0004-0050

BUILDING CHARACTERISTICS

ELEMENT	CD	CONSTRUCTION
Exterior Wall	20	FACE BRICK 100
Roof Structur	03	GABLE/HIP 100
Roof Cover	03	COMP SHNGL 100
Interior Wall	05	DRYWALL 100
Interior Floo	14	CARPET 90
Interior Floo	11	CLAY TILE 10
Air Condition	03	CENTRAL 100
Heating Type	04	AIR DUCTED 100
Bedrooms		4 100
Bathrooms		3.5 100
Frame	02	WOOD FRAME 100
Stories	2.	2. 100
Units		0 100
Occupancy	00	NONE 100
Quality	02	Quality Level 02
DOR CODE	5000	IMPROVED AG
MAP NUM		MKT AREA 09
NEIGHBORHOOD/LOC	9001.00	

AREA TYPE	TOTAL GROSS AREA	PCT OF BASE	TOT ADJ AREA	SUBAREA MARKET VALUE
BAS	1,789	100	1,789	179,023
FGR	775	55	426	42,629
FOP	717	30	215	21,515
FSP	200	40	80	8,005
FUS	1,143	100	1,143	114,378
UOP	546	20	109	10,908
TOTALS	5,170		3,762	376,459

MARKET ADJUSTMENTS

TYPE	MDL	EFF. AREA	TOT ADJ PTS	EFF. BASE RATE	REPL. COST NEW	AYB	EYB	ECON	FNCT		NORM	% COND
0900	01	3,762	104.7850	130.98	492,747	1991	1991	0	0	0	23.60	76.40

1 SNGL FAM – 100% - 0 Heated Area: 2932 HX Base Yr

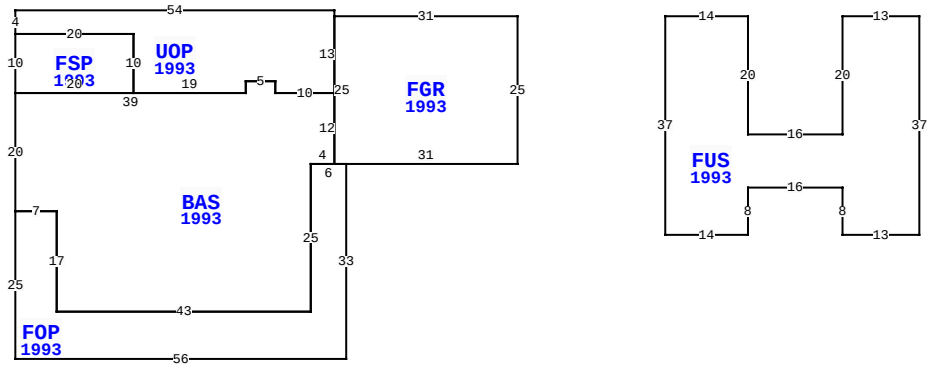

8483 GIDDENS LN, BRYCEVILLE

BLD DATE	03/03/2023 NW	LGL DATE	
XF DATE		LAND DATE	06/15/2023 MLU
INC DATE		AG DATE	

NASSAU COUNTY PROPERTY

PAGE 1 of 1 6

VALUATION SUMMARY

VALUATION BY		STANDARD
Tax Group: 6	Tax Dist:	
BUILDING MARKET VALUE		376,459
TOTAL MARKET OB/XF VALUE		10,619
TOTAL LAND VALUE - MARKET		227,600
TOTAL MARKET VALUE		422,382
SOH/AGL Deduction		218,107
ASSESSED VALUE		204,275
TOTAL EXEMPTION VALUE	HX HB	50,000
BASE TAXABLE VALUE		154,275
TOTAL JUST VALUE		614,678
NCON VALUE		0
INCOME VALUE		
PREVIOUS YEAR MKT VALUE		598,780

PERMIT NUM	DESCRIPTION	AMT	ISSUED
6914	NEW CONSTR	128,500	01/02/1991

SALES DATA

OFF RECORD Number	DATE	TYPE INST	Q U	V I	RSN CD	SALE PRICE
0616/0596	1/08/1991	WD	U	V	07	100
GRANTOR: NICHOLS RON & DORIS						
GRANTEE: GIDDENS DARRELL & M						
0602/0055	7/16/1990	WD	Q	V		68,400
GRANTOR: NICHOLS RONALD & D V						
GRANTEE: GIDDENS DARRELL & M						

BUILDING NOTES

BUILDING DIMENSIONS

FGR=[YR=1993] W31 UOP=[YR=1993] N1 W54 S4 FSP=[YR=1993] S10 BAS=[YR=1993] S20 FOP=[YR=1993] S25 E56 N33 W6 S25 W43 N17 W7$ E7 S17 E43 N25 E4 N12 W10 N2 W5 S2 W39$ E20 N10 W20$ E20 S10 E19 N2 E5 S2 E10 N13$ S25 E31 N25$ PTR= E25 FUS=[YR=1993] E14 S20 E16 N20 E13 S37 W13 N8 W16 S8 W14 N37$ W25$.

EXTRA FEATURES

LN	OB/XF CODE	DESCRIPTION	BLD	CAP	L	W	UNITS	UT	Adj R	ADJ UNIT PRICE	ORIG COND	YEAR ON	YEAR ACTUAL	Q	% COND	OB/XF MKT VALUE	NOTES
1	0504	FP-ELECTRI	0	100	0	0	1.00	UT	2,000.00	2,000.00	100	1991	1991	3	70	1,400	
2	0812	CONCRETE C	0	100	0	0	1,929.00	SF	4.00	4.00	100	1991	1991	3	62	4,784	
3	0803	ASPHALT C	0	100	495	8	3,960.00	SF	2.00	2.00	100	2005	2005	3	56	4,435	

LAND DESCRIPTION

TOTAL OB/XF 10,619

LN	USE CODE	CLS	LAND USE DESCRIPTION	CAP	RD	LOC ZONE	FRONT	DEPTH	TOT LND UTS	UNIT TYPE	DT	DPTH FACT	% COND	TOT ADJ	UNIT PRICE	ADJ UNIT PRICE	LAND VALUE	OTHER ADJUSTMENTS AND NOTES	YEAR	DENSITY	DECL	FRZ	YR	CONSRV
1	005000	C	RURAL HOME	100		OR	0.00	0.00	1.00	AC		1.00	1.00	1.00	30,000.00	30,000.00	30,000							
2	005901	A	HARDWOOD SI	0		OR	0.00	0.00	5.20	AC		1.00	1.00	1.00	225.00	225.00	1,170							
3	005401	A	TIMB2-1 SI	0		OR	0.00	0.00	5.20	AC		1.00	1.00	1.00	795.00	795.00	4,134							
4	009910	M	MKT.VAL.AG	0		OR	0.00	0.00	10.40	AC		1.00	1.00	1.00	19,000.00	19,000.00	197,600							

REVIEW DATE 03/09/2020 BY TWA Total Acres: 11.40 Total Land Value: 35,304 Market: 197,600 Agricultural: 5,304 Common: 30,000 PRINTED 08/06/2024 BY SYS