LOT 27
IN OR 2429/1333
CORNWALL SURVEY

CARTER CAREY T JR & DAWN M
15750 CR 108
HILLIARD, FL 32046

**2024**

**17-3N-24-2020-0027-0000**

## BUILDING CHARACTERISTICS

| ELEMENT | CD | CONSTRUCTION |
|---|---|---|
| Exterior Wall | 31 | HARDIE BRD 100 |
| Roof Structur | 03 | GABLE/HIP 100 |
| Roof Cover | 03 | COMP SHNGL 100 |
| Interior Wall | 05 | DRYWALL 100 |
| Interior Floo | 13 | LVT/LAMNT 100 |
| Air Condition | 03 | CENTRAL 100 |
| Heating Type | 04 | AIR DUCTED 100 |
| Bedrooms | | 4 100 |
| Bathrooms | | 2.5 100 |
| Frame | 02 | WOOD FRAME 100 |
| Stories | 1. | 1. 100 |
| Units | | 0 100 |
| Occupancy | 00 | NONE 100 |
| Quality | 03 | Quality Level 03 |
| DOR CODE | 5000 | IMPROVED AG |
| MAP NUM | | MKT AREA 06 |
| NEIGHBORHOOD/LOC | 6001.00 | |

| AREA TYPE | TOTAL GROSS AREA | PCT OF BASE | TOT ADJ AREA | SUBAREA MARKET VALUE |
|---|---|---|---|---|
| BAS | 2,485 | 100 | 2,485 | 385,424 |
| FCP | 604 | 25 | 151 | 23,420 |
| FGR | 288 | 55 | 158 | 24,506 |
| FOP | 238 | 30 | 71 | 11,012 |
| FOP | 358 | 30 | 107 | 16,596 |
| TOTALS | 3,973 | | 2,972 | 460,957 |

## MARKET ADJUSTMENTS

| TYPE | MDL | EFF. AREA | TOT ADJ PTS | EFF. BASE RATE | REPL. COST NEW | AYB | EYB | ECON | FNCT | | NORM | % COND |
|---|---|---|---|---|---|---|---|---|---|---|---|---|
| 0500 | 01 | 2,972 | 103.4000 | 155.10 | 460,957 | 2022 | 2022 | 0 | 0 | 0 | 0.00 | 100.00 |

1 SFR CUST – 100% - 2023 Heated Area: 2485 HX Base Yr 2023

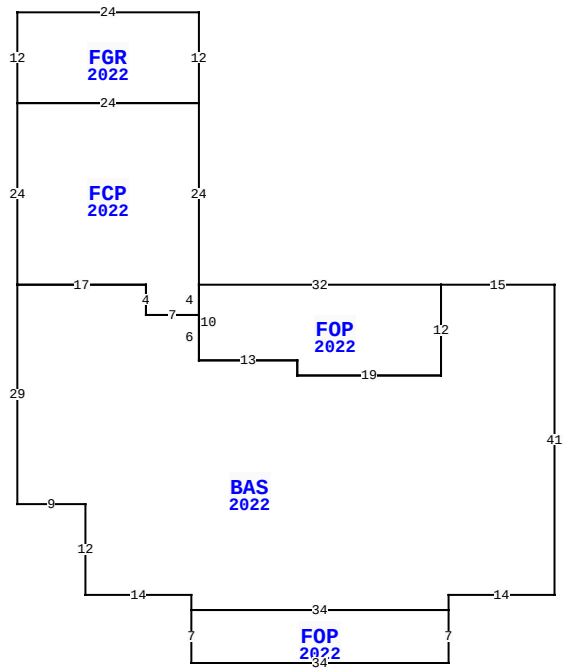


15750 CR 108, HILLIARD

| | | | |
|---|---|---|---|
| BLD DATE | 03/03/2023 NW | LGL DATE | |
| XF DATE | | LAND DATE | 06/15/2023 MLU |
| INC DATE | | AG DATE | |

## NASSAU COUNTY PROPERTY

PAGE 1 of 1 3

### VALUATION SUMMARY

| | | |
|---|---|---|
| VALUATION BY | | STANDARD |
| Tax Group: 3 | Tax Dist: | |
| BUILDING MARKET VALUE | | 460,957 |
| TOTAL MARKET OB/XF VALUE | | 17,680 |
| TOTAL LAND VALUE - MARKET | | 209,250 |
| TOTAL MARKET VALUE | | 534,189 |
| SOH/AGL Deduction | | 109,507 |
| ASSESSED VALUE | | 424,682 |
| TOTAL EXEMPTION VALUE | HX HB VX | 55,000 |
| BASE TAXABLE VALUE | | 369,682 |
| TOTAL JUST VALUE | | 687,887 |
| NCON VALUE | | 17,680 |
| INCOME VALUE | | |
| PREVIOUS YEAR MKT VALUE | | 548,934 |

| PERMIT NUM | DESCRIPTION | AMT | ISSUED |
|---|---|---|---|
| 20230361 | POLE SHED | | 10/06/2023 |
| 20210279 | NEW CONSTR | 0 | 12/27/2021 |

## SALES DATA

| OFF RECORD Number | DATE | TYPE INST | Q U | V I | RSN CD | SALE PRICE |
|---|---|---|---|---|---|---|
| 2429/1333 | 2/01/2021 | WD | Q | V | 01 | 115,000 |
| GRANTOR: PAOLILLO KELLAM EDWAR | | | | | | |
| GRANTEE: CARTER CAREY T JR & | | | | | | |
| 2258/1359 | 2/12/2019 | WD | Q | V | 01 | 70,000 |
| GRANTOR: HATFIELD DONALD | | | | | | |
| GRANTEE: PAOLILLO KELLAM EDW | | | | | | |

## BUILDING NOTES

## BUILDING DIMENSIONS

BAS=[YR=2022] W15 FOP=[YR=2022] W32 FCP=[YR=2022] N24
FGR=[YR=2022] N12 W24 S12 E24$ W24 S24 E17 S4 E7 N4$ S10 E13
S2 E19 N12$ S12 W19 N2 W13 N6 W7 N4 W17 S29 E9 S12 E14 S2
FOP=[YR=2022] S7 E34 N7 W34$ E34 N2 E14 N41$.

## EXTRA FEATURES

| LN | OB/XF CODE | DESCRIPTION | BLD | CAP | L | W | UNITS | UT | Adj R | ADJ UNIT PRICE | ORIG COND | YEAR ON | YEAR ACTUAL | Q | % COND | OB/XF MKT VALUE | NOTES |
|---|---|---|---|---|---|---|---|---|---|---|---|---|---|---|---|---|---|
| 1 | 0812 | CONCRETE C | 1 | 100 | 0 | 0 | 1,420.00 | SF | 4.00 | 4.00 | 100 | 2024 | 2023 | | 100 | 5,680 | |
| 2 | 0680 | POLE SHED | 0 | 100 | 30 | 40 | 1,200.00 | SF | 10.00 | 10.00 | 100 | 2024 | 2023 | | 100 | 12,000 | |

## LAND DESCRIPTION

TOTAL OB/XF 17,680

| LN | USE CODE | CLS | LAND USE DESCRIPTION | CAP | RD | LOC ZONE | FRONT | DEPTH | TOT LND UTS | UNIT TYPE | DT | DPTH FACT | % COND | TOT ADJ | UNIT PRICE | ADJ UNIT PRICE | LAND VALUE | OTHER ADJUSTMENTS AND NOTES | YEAR | DENSITY | DECL | FRZ | YR | CONSRV |
|---|---|---|---|---|---|---|---|---|---|---|---|---|---|---|---|---|---|---|---|---|---|---|---|---|
| 1 | 005000 | C | RURAL HOME | 100 | 0004 | A-1 | 0.00 | 0.00 | 1.75 | AC | | 1.00 | 1.00 | 1.00 | 30,000.00 | 30,000.00 | 52,500 | | | | | | | |
| 2 | 006005 | A | PAST/GRAZE | 0 | 0004 | A-1 | | | 8.25 | AC | | 1.00 | 1.00 | 1.00 | 370.00 | 370.00 | 3,052 | | | | | | | |
| 3 | 009910 | M | MKT.VAL.AG | 0 | 0004 | A-1 | | | 8.25 | AC | | 1.00 | 1.00 | 1.00 | 19,000.00 | 19,000.00 | 156,750 | | | | | | | |

REVIEW DATE 08/08/2023 BY WW Total Acres: 10.00 Total Land Value: 55,552 Market: 156,750 Agricultural: 3,052 Common: 52,500 PRINTED 08/06/2024 BY SYS