LOT 18
TUPELO PLANTATION WEST PB 8/17

RAMSEY MICHAEL AARON & JESSICA LYNN
34424 MITIGATION TRL
CALLAHAN, FL 32011

2024

17-1N-24-2091-0018-0000

BUILDING CHARACTERISTICS

ELEMENT	CD	CONSTRUCTION
Exterior Wall	31	HARDIE BRD 100
Roof Structur	08	IRREGULAR 100
Roof Cover	03	COMP SHNGL 100
Interior Wall	05	DRYWALL 100
Interior Floo	08	SHT VINYL 70
Interior Floo	14	CARPET 30
Air Condition	03	CENTRAL 100
Heating Type	04	AIR DUCTED 100
Bedrooms		4 100
Bathrooms		2.5 100
Frame	02	WOOD FRAME 100
Stories	0	0 100
Units		0 100
Occupancy	00	NONE 100
Quality	01	Quality Level 01

DOR CODE 0100 SINGLE FAMILY
MAP NUM | MKT AREA 09
NEIGHBORHOOD/LOC 9013.00

AREA TYPE	TOTAL GROSS AREA	PCT OF BASE	TOT ADJ AREA	SUBAREA MARKET VALUE
BAS	2,690	100	2,690	374,289
FOP	220	30	66	9,183
FOP	248	30	74	10,296
TOTALS	3,158		2,830	393,770

MARKET ADJUSTMENTS

TYPE	MDL	EFF. AREA	TOT ADJ PTS	EFF. BASE RATE	REPL. COST NEW	AYB	EYB	ECON	FNCT		NORM	% COND
0500	01	2,830	94.1760	141.26	399,766	2019	2019	0	0	0	1.50	98.50

1 SFR CUST – 0% - 2024 Heated Area: 2690 HX Base Yr

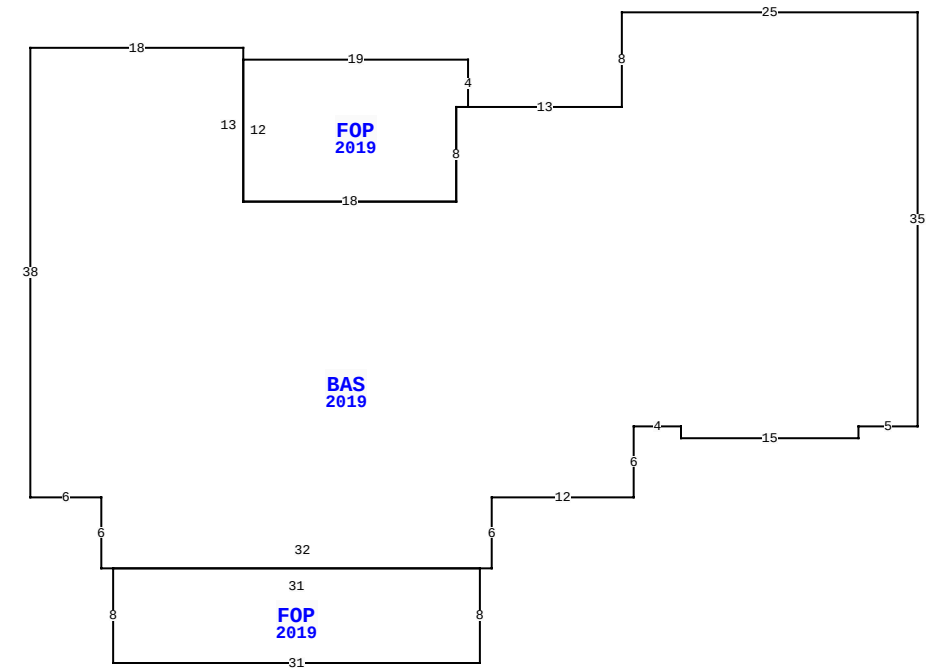

34424 MITIGATION TR, CALLAHAN

BLD DATE		LGL DATE	
XF DATE		LAND DATE	03/28/2024 MLU
INC DATE		AG DATE	

NASSAU COUNTY PROPERTY

PAGE 1 of 2 6

VALUATION SUMMARY

VALUATION BY	STANDARD
Tax Group: 6	Tax Dist:
BUILDING MARKET VALUE	413,738
TOTAL MARKET OB/XF VALUE	6,472
TOTAL LAND VALUE - MARKET	116,600
TOTAL MARKET VALUE	536,810
SOH/AGL Deduction	0
ASSESSED VALUE	536,810
TOTAL EXEMPTION VALUE	0
BASE TAXABLE VALUE	536,810
TOTAL JUST VALUE	536,810
NCON VALUE	0
INCOME VALUE	
PREVIOUS YEAR MKT VALUE	463,619

PERMIT NUM	DESCRIPTION	AMT	ISSUED
19012216	CO ISSUED	0	11/26/2019
19006207	GARAGE	50,679	06/11/2019
18011395	NEW CONSTR	334,357	11/14/2018

SALES DATA

OFF RECORD Number	DATE	TYPE INST	Q / U	V / I	RSN CD	SALE PRICE
2689/602	1/16/2024	WD	U	I	38	538,000
GRANTOR: SAYLOR EDEN						
GRANTEE: RAMSEY MICHAEL AARO						
2665/244	8/29/2023	FJ	U	I	11	0
GRANTOR: WOLFE CARRIEANNE ESTA						
GRANTEE: BARTMESS DAVID						

BUILDING NOTES

BUILDING DIMENSIONS

BAS=[YR=2019] W25 S8 W13 FOP=[YR=2019] N4 W19 S12 E18 N8 E1$ W1 S8 W18 N13 W18 S38 E6 S6 E1 FOP=[YR=2019] S8 E31 N8 W31$ E32 N6 E12 N6 E4 S1 E15 N1 E5 N35$.

EXTRA FEATURES

LN	OB/XF CODE	DESCRIPTION	BLD	CAP	L	W	UNITS	UT	Adj R	ADJ UNIT PRICE	ORIG COND	YEAR ON	YEAR ACTUAL	Q	% COND	OB/XF MKT VALUE	NOTES
1	0810	CONCRETE A	0	0	0	0	239.00	SF	6.50	6.50	100	2019	2019	3	98	1,522	
2	0501	FP-AVERAGE	0	0	0	0	1.00	UT	5,000.00	5,000.00	100	2024	2019		99	4,950	

LAND DESCRIPTION

TOTAL OB/XF 6,472

LN	USE CODE	CLS	LAND USE DESCRIPTION	CAP	RD	LOC ZONE	FRONT	DEPTH	TOT LND UTS	UNIT TYPE	DT	DPTH FACT	% COND	TOT ADJ	UNIT PRICE	ADJ UNIT PRICE	LAND VALUE	OTHER ADJUSTMENTS AND NOTES	YEAR	DENSITY	DECL	FRZ	YR	CONSRV
1	000115	C	SFR ACRES	0		PUD	0.00	0.00	4.55	AC		1.00	1.00	1.00	24,000.00	24,000.00	109,200							
2	009605	C	WETLANDS	0		PUD	0.00	0.00	1.85	AC		1.00	1.00	1.00	4,000.00	4,000.00	7,400							

REVIEW DATE 05/17/2024 BY WWA Total Acres: 6.40 Total Land Value: 116,600 Market: 0 Agricultural: 0 Common: 116,600 PRINTED 08/06/2024 BY SYS

LOT 18
TUPELO PLANTATION WEST PB 8/17

RAMSEY MICHAEL AARON & JESSICA LYNN
34424 MITIGATION TRL
CALLAHAN, FL 32011

2024

17-1N-24-2091-0018-0000

NASSAU COUNTY PROPERTY

BUILDING CHARACTERISTICS

ELEMENT	CD	CONSTRUCTION
Exterior Wall	25	MOD METAL 100
Roof Structur	03	GABLE/HIP 100
Roof Cover	12	MODULAR MT 100
Interior Wall	07	NONE 100
Interior Floo	03	CONC FINSH 100
Air Condition	01	NONE 100
Heating Type	01	NONE 100
Bedrooms		0 100
Bathrooms		0 100
Frame	05	STEEL 100
Stories	0	0 100
Units		0 100
Occupancy	00	NONE 100
Quality	06	Quality Level 06

DOR CODE 0100 SINGLE FAMILY
MAP NUM | MKT AREA 09
NEIGHBORHOOD/LOC 9013.00

AREA TYPE	TOTAL GROSS AREA	PCT OF BASE	TOT ADJ AREA	SUBAREA MARKET VALUE
BAS	1,040	100	1,040	19,968
TOTALS	1,040		1,040	19,968

MARKET ADJUSTMENTS

TYPE	MDL	EFF. AREA	TOT ADJ PTS	EFF. BASE RATE	REPL. COST NEW	AYB	EYB	ECON	FNCT		NORM	% COND
6500	01	1,040	57.1320	20.00	20,800	2019	2019	0	0	0	4.00	96.00

2 GARAGE RES – 0% - 2024 Heated Area: 1040 HX Base Yr

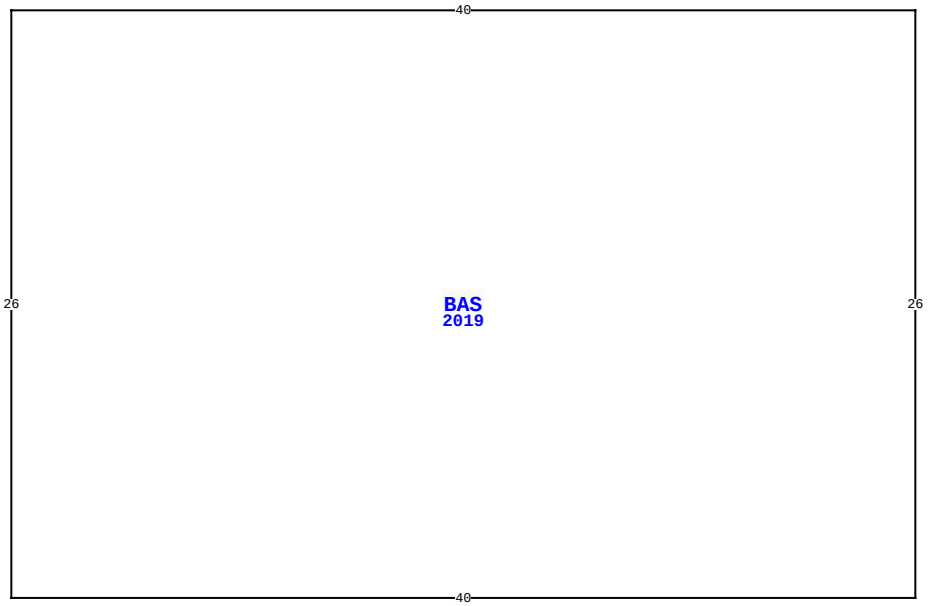

34424 MITIGATION TR, CALLAHAN

BLD DATE		LGL DATE	
XF DATE		LAND DATE	03/28/2024 MLU
INC DATE		AG DATE	

VALUATION SUMMARY

VALUATION BY	STANDARD
Tax Group: 6	Tax Dist:
BUILDING MARKET VALUE	413,738
TOTAL MARKET OB/XF VALUE	6,472
TOTAL LAND VALUE - MARKET	116,600
TOTAL MARKET VALUE	536,810
SOH/AGL Deduction	0
ASSESSED VALUE	536,810
TOTAL EXEMPTION VALUE	0
BASE TAXABLE VALUE	536,810
TOTAL JUST VALUE	536,810
NCON VALUE	0
INCOME VALUE	
PREVIOUS YEAR MKT VALUE	463,619

PERMIT NUM	DESCRIPTION	AMT	ISSUED

SALES DATA

OFF RECORD Number	DATE	TYPE INST	Q / U	V / I	RSN CD	SALE PRICE
2689/602	1/16/2024	WD	U	I	38	538,000
GRANTOR: SAYLOR EDEN						
GRANTEE: RAMSEY MICHAEL AARO						
2665/244	8/29/2023	FJ	U	I	11	0
GRANTOR: WOLFE CARRIEANNE ESTA						
GRANTEE: BARTMESS DAVID						

BUILDING NOTES

BUILDING DIMENSIONS

BAS=[YR=2019] W40 S26 E40 N26$.

EXTRA FEATURES

LN	OB/XF CODE	DESCRIPTION	BLD	CAP	L	W	UNITS	UT	Adj R	ADJ UNIT PRICE	ORIG COND	YEAR ON	YEAR ACTUAL	Q	% COND	OB/XF MKT VALUE	NOTES

LAND DESCRIPTION

TOTAL OB/XF 0

LN	USE CODE	CLS	LAND USE DESCRIPTION	CAP	RD	LOC ZONE	FRONT	DEPTH	TOT LND UTS	UNIT TYPE	DT	DPTH FACT	% COND	TOT ADJ	UNIT PRICE	ADJ UNIT PRICE	LAND VALUE	OTHER ADJUSTMENTS AND NOTES	YEAR	DENSITY	DECL	FRZ	YR	CONSRV

REVIEW DATE 05/17/2024 BY WWA Total Acres: 6.40 Total Land Value: 116,600 Market: 0 Agricultural: 0 Common: 116,600 PRINTED 08/06/2024 BY SYS