LOT 9
IN OR 1205/1140
WOODLAND ESTATES #1 PB 4/29-30

SMITH JOHN A & TAMMY P
43717 FREEDOM DR
CALLAHAN, FL 32011

2024

16-1N-25-2910-0009-0000

NASSAU COUNTY PROPERTY

BUILDING CHARACTERISTICS

ELEMENT	CD	CONSTRUCTION
Exterior Wall	10	ABOVE AVG 90
Exterior Wall	21	STONE 10
Roof Structur	03	GABLE/HIP 100
Roof Cover	03	COMP SHNGL 100
Interior Wall	05	DRYWALL 100
Interior Floo	13	LVT/LAMNT 70
Interior Floo	11	CLAY TILE 30
Air Condition	03	CENTRAL 100
Heating Type	04	AIR DUCTED 100
Bedrooms		3 100
Bathrooms		2.5 100
Frame	02	WOOD FRAME 100
Stories	2.	2. 100
Units		0 100
Occupancy	00	NONE 100
Quality	05	Quality Level 05
DOR CODE	0100	SINGLE FAMILY
MAP NUM		MKT AREA 08
NEIGHBORHOOD/LOC	8005.00	

AREA TYPE	TOTAL GROSS AREA	PCT OF BASE	TOT ADJ AREA	SUBAREA MARKET VALUE
BAS	2,869	100	2,869	376,180
FGR	713	55	392	51,399
FOP	204	30	61	7,999
FOP	223	30	67	8,785
FUS	649	100	649	85,096
PTO	40	5	2	262
STP	28	10	3	394
STP	30	10	3	394
UOP	50	20	10	1,312
TOTALS	4,806		4,056	531,819

MARKET ADJUSTMENTS

TYPE	MDL	EFF. AREA	TOT ADJ PTS	EFF. BASE RATE	REPL. COST NEW	AYB	EYB	ECON	FNCT		NORM	% COND
0900	01	4,056	107.6416	134.55	545,735	2017	2017	0	0	0	2.55	97.45

1 SNGL FAM – 100% - 2018 Heated Area: 3518 HX Base Yr 2018

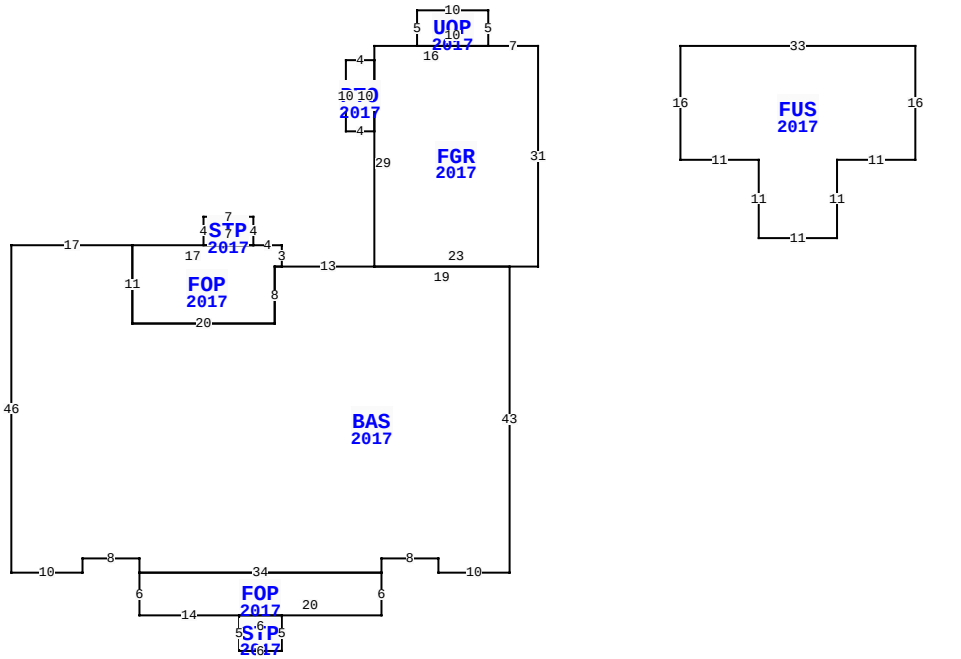

43717 FREEDOM DR, CALLAHAN

BLD DATE		LGL DATE	
XF DATE		LAND DATE	
INC DATE		AG DATE	

VALUATION SUMMARY

VALUATION BY		STANDARD
Tax Group: 6	Tax Dist:	
BUILDING MARKET VALUE		555,166
TOTAL MARKET OB/XF VALUE		7,764
TOTAL LAND VALUE - MARKET		70,920
TOTAL MARKET VALUE		633,850
SOH/AGL Deduction		238,740
ASSESSED VALUE		395,110
TOTAL EXEMPTION VALUE	HX HB	50,000
BASE TAXABLE VALUE		345,110
TOTAL JUST VALUE		633,850
NCON VALUE		0
INCOME VALUE		
PREVIOUS YEAR MKT VALUE		610,089

PERMIT NUM	DESCRIPTION	AMT	ISSUED
1705344	CO ISSUED	0	06/15/2017
B1633428	P & S	0	11/21/2016
B1633429	22X48	0	11/21/2016

SALES DATA

OFF RECORD Number	DATE	TYPE INST	Q / U	V / I	RSN CD	SALE PRICE
1205/1140	2/03/2004	WD	Q	V		62,000
GRANTOR: BECK BILLY J & LAVERN						
GRANTEE: SMITH JOHN A & TAMM						
0171/0187	1/01/1974	WD	Q	V		12,000
GRANTOR:						
GRANTEE:						

BUILDING NOTES

BUILDING DIMENSIONS

FGR=[YR=2017] W7 UOP=[YR=2017] N5 W10 S5 E10$ W16 S2
PTO=[YR=2017] W4 S10 E4 N10$ S29 BAS=[YR=2017] W13
FOP=[YR=2017] N3 W4 STP=[YR=2017] N4 W7 S4 E7$ W17 S11 E20
N8 E1$ W1 S8 W20 N11 W17 S46 E10 N2 E8 S2 FOP=[YR=2017] S6
E14 STP=[YR=2017] S5 E6 N5 W6$ E20 N6 W34$ E34 N2 E8 S2 E10
N43 W19$ E23 N31$ PTR=E20 FUS=[YR=2017] E33 S16 W11 S11 W11
N11 W11 N16$ W20$.

EXTRA FEATURES

L N	OB/XF CODE	DESCRIPTION	BLD	CAP	L	W	UNITS	UT	Adj R	ADJ UNIT PRICE	ORIG COND	YEAR ON	YEAR ACTUAL	Q	% COND	OB/XF MKT VALUE	NOTES
1	0812	CONCRETE C	0	100	0	0	2,001.00	SF	4.00	4.00	100	2017	2017	3	97	7,764	

LAND DESCRIPTION

TOTAL OB/XF 7,764

L N	USE CODE	CLS	LAND USE DESCRIPTION	CAP	R D	LOC ZONE	FRONT	DEPTH	TOT LND UTS	UNIT TYPE	D T	DPTH FACT	% COND	TOT ADJ	UNIT PRICE	ADJ UNIT PRICE	LAND VALUE	OTHER ADJUSTMENTS AND NOTES	YEAR	DENSITY	DECL	FRZ	YR	CONSRV
1	000115	C	SFR ACRES	100		OR	0.00	0.00	3.94	AC		1.00	1.00	1.00	18,000.00	18,000.00	70,920							

REVIEW DATE 02/27/2024 BY KBA Total Acres: 3.94 Total Land Value: 70,920 Market: 0 Agricultural: 0 Common: 70,920 PRINTED 08/06/2024 BY SYS

LOT 9
IN OR 1205/1140
WOODLAND ESTATES #1 PB 4/29-30

SMITH JOHN A & TAMMY P
43717 FREEDOM DR
CALLAHAN, FL 32011

2024

16-1N-25-2910-0009-0000

NASSAU COUNTY PROPERTY

BUILDING CHARACTERISTICS

ELEMENT	CD	CONSTRUCTION
Exterior Wall	10	ABOVE AVG 100
Roof Structur	03	GABLE/HIP 100
Roof Cover	03	COMP SHNGL 100
Interior Wall	01	MINIMUM 100
Interior Floo	03	CONC FINSH 100
Air Condition	01	NONE 100
Heating Type	01	NONE 100
Bedrooms		0 100
Bathrooms		0 100
Frame	02	WOOD FRAME 100
Stories	1.	1. 100
Units		0 100
Occupancy	00	NONE 100
Quality	04	Quality Level 04

DOR CODE	0100	SINGLE FAMILY	
MAP NUM		MKT AREA	08
NEIGHBORHOOD/LOC	8005.00		

AREA TYPE	TOTAL GROSS AREA	PCT OF BASE	TOT ADJ AREA	SUBAREA MARKET VALUE
BAS	1,056	100	1,056	23,347
TOTALS	1,056		1,056	23,347

MARKET ADJUSTMENTS

TYPE	MDL	EFF. AREA	TOT ADJ PTS	EFF. BASE RATE	REPL. COST NEW	AYB	EYB	ECON	FNCT		NORM	% COND
6500	01	1,056	67.2000	23.52	24,837	2017	2017	0	0	0	6.00	94.00

2 GARAGE RES – 100% - 2018 Heated Area: 1056 HX Base Yr 2018

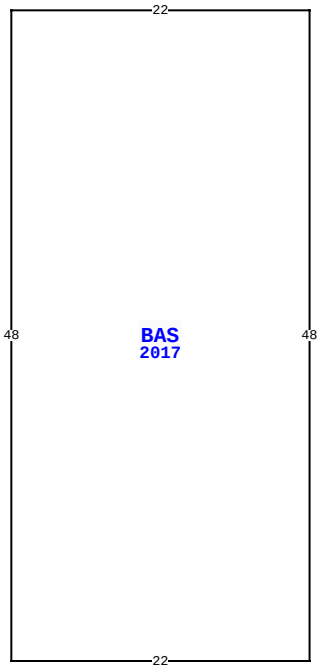

43717 FREEDOM DR, CALLAHAN

BLD DATE		LGL DATE	
XF DATE		LAND DATE	
INC DATE		AG DATE	

VALUATION SUMMARY

VALUATION BY		STANDARD
Tax Group: 6	Tax Dist:	
BUILDING MARKET VALUE		555,166
TOTAL MARKET OB/XF VALUE		7,764
TOTAL LAND VALUE - MARKET		70,920
TOTAL MARKET VALUE		633,850
SOH/AGL Deduction		238,740
ASSESSED VALUE		395,110
TOTAL EXEMPTION VALUE	HX HB	50,000
BASE TAXABLE VALUE		345,110
TOTAL JUST VALUE		633,850
NCON VALUE		0
INCOME VALUE		
PREVIOUS YEAR MKT VALUE		610,089

PERMIT NUM	DESCRIPTION	AMT	ISSUED

SALES DATA

OFF RECORD Number	DATE	TYPE INST	Q U /	V I /	RSN CD	SALE PRICE
1205/1140	2/03/2004	WD	Q	V		62,000
GRANTOR: BECK BILLY J & LAVERN						
GRANTEE: SMITH JOHN A & TAMM						
0171/0187	1/01/1974	WD	Q	V		12,000
GRANTOR:						
GRANTEE:						

BUILDING NOTES

BUILDING DIMENSIONS

BAS=[YR=2017] W22 S48 E22 N48$.

EXTRA FEATURES

L N	OB/XF CODE	DESCRIPTION	BLD	CAP	L	W	UNITS	UT	Adj R	ADJ UNIT PRICE	ORIG COND	YEAR ON	YEAR ACTUAL	Q	% COND	OB/XF MKT VALUE	NOTES

LAND DESCRIPTION

TOTAL OB/XF 0

L N	USE CODE	CLS	LAND USE DESCRIPTION	CAP	R D	LOC ZONE	FRONT	DEPTH	TOT LND UTS	UNIT TYPE	D T	DPTH FACT	% COND	TOT ADJ	UNIT PRICE	ADJ UNIT PRICE	LAND VALUE	OTHER ADJUSTMENTS AND NOTES	YEAR	DENSITY	DECL	FRZ	YR	CONSRV

REVIEW DATE 02/27/2024 BY KBA Total Acres: 3.94 Total Land Value: 70,920 Market: 0 Agricultural: 0 Common: 70,920 PRINTED 08/06/2024 BY SYS