LOT 4
WOODLAND ESTATES UNIT 1
PB 4/29 & 30

**LAMB CHRISTOPHER A & SARA**
43055 HILLTOP LANE
CALLAHAN, FL 32011

**2024**

**16-1N-25-2910-0004-0000**

## NASSAU COUNTY PROPERTY



## BUILDING CHARACTERISTICS

| ELEMENT | CD | CONSTRUCTION |
|---|---|---|
| Exterior Wall | 20 | FACE BRICK 70 |
| Exterior Wall | 05 | AVERAGE 30 |
| Roof Structur | 03 | GABLE/HIP 100 |
| Roof Cover | 03 | COMP SHNGL 100 |
| Interior Wall | 05 | DRYWALL 100 |
| Interior Floo | 14 | CARPET 80 |
| Interior Floo | 11 | CLAY TILE 20 |
| Air Condition | 03 | CENTRAL 100 |
| Heating Type | 04 | AIR DUCTED 100 |
| Bedrooms | | 3 100 |
| Bathrooms | | 2.5 100 |
| Frame | 02 | WOOD FRAME 100 |
| Stories | 2. | 2. 100 |
| Units | | 0 100 |
| Occupancy | 00 | NONE 100 |
| Quality | 05 | Quality Level 05 |
| DOR CODE | 0100 | SINGLE FAMILY |
| MAP NUM | | MKT AREA 08 |
| NEIGHBORHOOD/LOC | 8005.00 | |

| AREA TYPE | TOTAL GROSS AREA | PCT OF BASE | TOT ADJ AREA | SUBAREA MARKET VALUE |
|---|---|---|---|---|
| BAS | 1,548 | 100 | 1,548 | 139,437 |
| FEP | 198 | 80 | 158 | 14,232 |
| FOP | 476 | 30 | 143 | 12,881 |
| FSP | 198 | 40 | 79 | 7,116 |
| FUS | 772 | 100 | 772 | 69,539 |
| TOTALS | 3,192 | | 2,700 | 243,205 |

## MARKET ADJUSTMENTS

| TYPE | MDL | EFF. AREA | TOT ADJ PTS | EFF. BASE RATE | REPL. COST NEW | AYB | EYB | ECON | FNCT | | NORM | % COND |
|---|---|---|---|---|---|---|---|---|---|---|---|---|
| 0100 | 01 | 2,700 | 115.8432 | 110.05 | 297,135 | 1990 | 1996 | 0 | 0 | 0 | 18.15 | 81.85 |

1 SINGLE FAM – 100% - 2020 Heated Area: 2320 HX Base Yr 2020

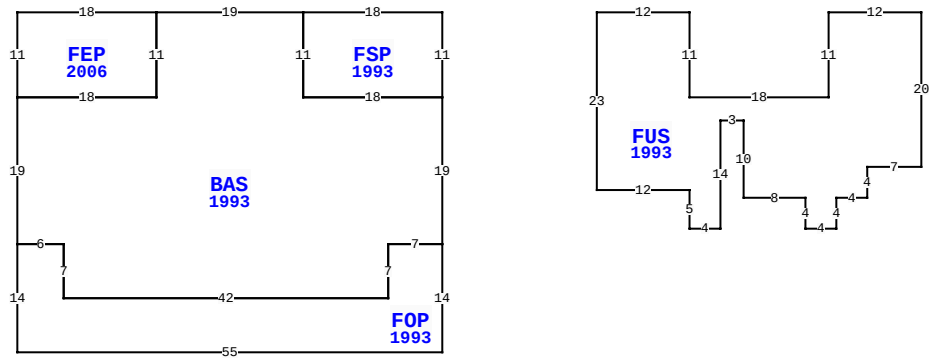


43055 HILLTOP LN, CALLAHAN

| | | | |
|---|---|---|---|
| BLD DATE | | LGL DATE | |
| XF DATE | | LAND DATE | |
| INC DATE | | AG DATE | |

## VALUATION SUMMARY

| | | |
|---|---|---|
| VALUATION BY | | STANDARD |
| Tax Group: 6 | Tax Dist: | |
| BUILDING MARKET VALUE | | 265,569 |
| TOTAL MARKET OB/XF VALUE | | 5,964 |
| TOTAL LAND VALUE - MARKET | | 82,080 |
| TOTAL MARKET VALUE | | 353,613 |
| SOH/AGL Deduction | | 106,415 |
| ASSESSED VALUE | | 247,198 |
| TOTAL EXEMPTION VALUE | HX HB | 50,000 |
| BASE TAXABLE VALUE | | 197,198 |
| TOTAL JUST VALUE | | 353,613 |
| NCON VALUE | | 0 |
| INCOME VALUE | | |
| PREVIOUS YEAR MKT VALUE | | 343,420 |

| PERMIT NUM | DESCRIPTION | AMT | ISSUED |
|---|---|---|---|
| P14104 | OTHER | 0 | 01/01/2010 |
| 6257 | NEW CONSTR | 100,000 | 01/29/1990 |

## SALES DATA

| OFF RECORD Number | DATE | TYPE INST | Q U | V I | RSN CD | SALE PRICE |
|---|---|---|---|---|---|---|
| 2298/1050 | 8/09/2019 | WD | Q | I | 01 | 315,000 |
| GRANTOR: KARST SHIRLEY | | | | | | |
| GRANTEE: LAMB CHRISTOPHER A | | | | | | |
| 0152/0218 | 1/01/1973 | WD | Q | V | | 11,000 |
| GRANTOR: | | | | | | |
| GRANTEE: | | | | | | |

## BUILDING NOTES

## BUILDING DIMENSIONS

FSP=[YR=1993] W18 BAS=[YR=1993] W19 FEP=[YR=2006] W18 S11 E18 N11$ S11 W18 S19 FOP=[YR=1993] S14 E55 N14 W7 S7 W42 N7 W6$ E6 S7 E42 N7 E7 N19 W18 N11$ S11 E18 N11$ PTR= E20 FUS=[YR=1993] E12 S11 E18 N11 E12 S20 W7 S4 W4 S4 W4 N4 W8 N10 W3 S14 W4 N5 W12 N23$ W20$ .

## EXTRA FEATURES

| LN | OB/XF CODE | DESCRIPTION | BLD | CAP | L | W | UNITS | UT | Adj R | ADJ UNIT PRICE | ORIG COND | YEAR ON | YEAR ACTUAL | Q | % COND | OB/XF MKT VALUE | NOTES |
|---|---|---|---|---|---|---|---|---|---|---|---|---|---|---|---|---|---|
| 1 | 0510 | GARAGE WD- | 0 | 100 | 16 | 32 | 512.00 | SF | 35.00 | 35.00 | 100 | 1989 | 1989 | 3 | 20 | 3,584 | |
| 2 | 0500 | FP-PRE FAB | 0 | 100 | 0 | 0 | 1.00 | UT | 3,500.00 | 3,500.00 | 100 | 1990 | 1990 | 3 | 68 | 2,380 | |

## LAND DESCRIPTION

TOTAL OB/XF 5,964

| LN | USE CODE | CLS | LAND USE DESCRIPTION | CAP | RD | LOC ZONE | FRONT | DEPTH | TOT LND UTS | UNIT TYPE | DT | DPTH FACT | % COND | TOT ADJ | UNIT PRICE | ADJ UNIT PRICE | LAND VALUE | OTHER ADJUSTMENTS AND NOTES | YEAR | DENSITY | DECL | FRZ | YR | CONSRV |
|---|---|---|---|---|---|---|---|---|---|---|---|---|---|---|---|---|---|---|---|---|---|---|---|---|
| 1 | 000115 | C | SFR ACRES | 100 | | OR | 0.00 | 0.00 | 4.56 | AC | | 1.00 | 1.00 | 1.00 | 18,000.00 | 18,000.00 | 82,080 | | | | | | | |

REVIEW DATE 06/05/2020 BY KBA Total Acres: 4.56 Total Land Value: 82,080 Market: 0 Agricultural: 0 Common: 82,080 PRINTED 08/06/2024 BY SYS

LOT 4
WOODLAND ESTATES UNIT 1
PB 4/29 & 30

**LAMB CHRISTOPHER A & SARA**
43055 HILLTOP LANE
CALLAHAN, FL 32011

**2024**

**16-1N-25-2910-0004-0000**

## BUILDING CHARACTERISTICS

| ELEMENT | CD | CONSTRUCTION |
|---|---|---|
| Exterior Wall | 05 | AVERAGE 100 |
| Roof Structur | 07 | GAMBREL 100 |
| Roof Cover | 03 | COMP SHNGL 100 |
| Interior Wall | 05 | DRYWALL 100 |
| Interior Floo | 03 | CONC FINSH 100 |
| Air Condition | 03 | CENTRAL 100 |
| Heating Type | 04 | AIR DUCTED 100 |
| Bedrooms | | 0 100 |
| Bathrooms | | 0.5 100 |
| Frame | 02 | WOOD FRAME 100 |
| Stories | 1.5 | 1.5 100 |
| Units | | 0 100 |
| Occupancy | 00 | NONE 100 |
| Quality | 04 | Quality Level 04 |

| | | | |
|---|---|---|---|
| DOR CODE | 0100 | SINGLE FAMILY | |
| MAP NUM | | MKT AREA | 08 |
| NEIGHBORHOOD/LOC | 8005.00 | | |

| AREA TYPE | TOTAL GROSS AREA | PCT OF BASE | TOT ADJ AREA | SUBAREA MARKET VALUE |
|---|---|---|---|---|
| BAS | 880 | 100 | 880 | 15,770 |
| BAS | 128 | 100 | 128 | 2,294 |
| STR | 64 | 10 | 6 | 108 |
| UST | 520 | 45 | 234 | 4,194 |
| TOTALS | 1,592 | | 1,248 | 22,364 |

## MARKET ADJUSTMENTS

| TYPE | MDL | EFF. AREA | TOT ADJ PTS | EFF. BASE RATE | REPL. COST NEW | AYB | EYB | ECON | FNCT | | NORM | % COND |
|---|---|---|---|---|---|---|---|---|---|---|---|---|
| 6500 | 01 | 1,248 | 102.3960 | 35.84 | 44,728 | 1986 | 1991 | 0 | 0 | 0 | 50.00 | 50.00 |

2 GARAGE RES – 100% - 2020 Heated Area: 1008 HX Base Yr 2020

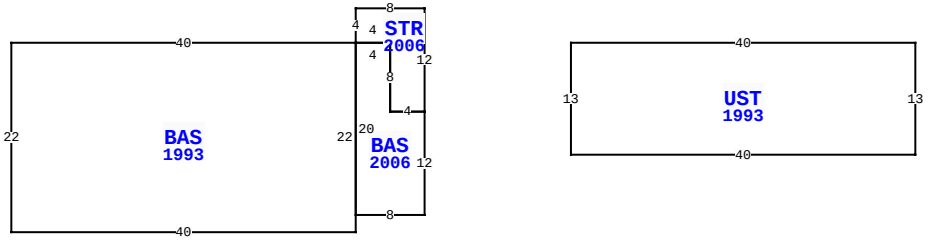


43055 HILLTOP LN, CALLAHAN

| | | | |
|---|---|---|---|
| BLD DATE | | LGL DATE | |
| XF DATE | | LAND DATE | |
| INC DATE | | AG DATE | |

## NASSAU COUNTY PROPERTY

PAGE 2 of 2 6

### VALUATION SUMMARY

| | | |
|---|---|---|
| VALUATION BY | | STANDARD |
| Tax Group: 6 | Tax Dist: | |
| BUILDING MARKET VALUE | | 265,569 |
| TOTAL MARKET OB/XF VALUE | | 5,964 |
| TOTAL LAND VALUE - MARKET | | 82,080 |
| TOTAL MARKET VALUE | | 353,613 |
| SOH/AGL Deduction | | 106,415 |
| ASSESSED VALUE | | 247,198 |
| TOTAL EXEMPTION VALUE | HX HB | 50,000 |
| BASE TAXABLE VALUE | | 197,198 |
| TOTAL JUST VALUE | | 353,613 |
| NCON VALUE | | 0 |
| INCOME VALUE | | |
| PREVIOUS YEAR MKT VALUE | | 343,420 |

| PERMIT NUM | DESCRIPTION | AMT | ISSUED |
|---|---|---|---|
| | | | |

## SALES DATA

| OFF RECORD Number | DATE | TYPE INST | Q / U | V / I | RSN CD | SALE PRICE |
|---|---|---|---|---|---|---|
| 2298/1050 | 8/09/2019 | WD | Q | I | 01 | 315,000 |
| GRANTOR: KARST SHIRLEY | | | | | | |
| GRANTEE: LAMB CHRISTOPHER A | | | | | | |
| 0152/0218 | 1/01/1973 | WD | Q | V | | 11,000 |
| GRANTOR: | | | | | | |
| GRANTEE: | | | | | | |

## BUILDING NOTES

## BUILDING DIMENSIONS

BAS=[YR=1993] W40 S22 E40 N22$ BAS=[YR=2006] S20 E8 N12
STR=[YR=2006] N12 W8 S4 E4 S8 E4$ W4 N8 W4$ PTR= E25
UST=[YR=1993] E40 S13 W40 N13$ W25$.

## EXTRA FEATURES

| L N | OB/XF CODE | DESCRIPTION | BLD | CAP | L | W | UNITS | UT | Adj R | ADJ UNIT PRICE | ORIG COND | YEAR ON | YEAR ACTUAL | Q | % COND | OB/XF MKT VALUE | NOTES |
|---|---|---|---|---|---|---|---|---|---|---|---|---|---|---|---|---|---|

## LAND DESCRIPTION

TOTAL OB/XF 0

| L N | USE CODE | CLS | LAND USE DESCRIPTION | CAP | R D | LOC ZONE | FRONT | DEPTH | TOT LND UTS | UNIT TYPE | D T | DPTH FACT | % COND | TOT ADJ | UNIT PRICE | ADJ UNIT PRICE | LAND VALUE | OTHER ADJUSTMENTS AND NOTES | YEAR | DENSITY | DECL | FRZ | YR | CONSRV |
|---|---|---|---|---|---|---|---|---|---|---|---|---|---|---|---|---|---|---|---|---|---|---|---|---|

REVIEW DATE 06/05/2020 BY KBA Total Acres: 4.56 Total Land Value: 82,080 Market: 0 Agricultural: 0 Common: 82,080 PRINTED 08/06/2024 BY SYS