PT OF LOT 31
IN OR 841/266
RATLIFF ACRES UNR

BLACKSHEAR JOHN D JR & MONIKA
43154 WOODLAND LANE
CALLAHAN, FL 32011

2024

16-1N-25-2900-0031-0010

BUILDING CHARACTERISTICS

ELEMENT	CD	CONSTRUCTION
Exterior Wall	20	FACE BRICK 70
Exterior Wall	12	CEDAR 30
Roof Structur	03	GABLE/HIP 100
Roof Cover	03	COMP SHNGL 100
Interior Wall	05	DRYWALL 100
Interior Floo	11	CLAY TILE 50
Interior Floo	14	CARPET 50
Air Condition	03	CENTRAL 100
Heating Type	04	AIR DUCTED 100
Bedrooms		3 100
Bathrooms		2.5 100
Frame	02	WOOD FRAME 100
Stories	1.	1. 100
Units		0 100
BUD8 Adjustme	06	DIST 1D 100
Occupancy	00	NONE 100
Quality	03	Quality Level 03
DOR CODE	0100	SINGLE FAMILY
MAP NUM		MKT AREA 08
NEIGHBORHOOD/LOC	8005.00	

AREA TYPE	TOTAL GROSS AREA	PCT OF BASE	TOT ADJ AREA	SUBAREA MARKET VALUE
BAS	2,350	100	2,350	260,294
BAS	696	100	696	77,091
FGR	702	55	386	42,755
FOP	224	30	67	7,421
FST	56	55	31	3,433
UCP	700	20	140	15,507
UDG	1,350	55	742	82,187
TOTALS	6,078		4,412	488,688

MARKET ADJUSTMENTS

TYPE	MDL	EFF. AREA	TOT ADJ PTS	EFF. BASE RATE	REPL. COST NEW	AYB	EYB	ECON	FNCT		NORM	% COND
0900	01	4,412	113.4000	141.75	625,401	1987	1990	0	0	0	21.86	78.14

1 SNGL FAM – 100% - 0 Heated Area: 3046 HX Base Yr

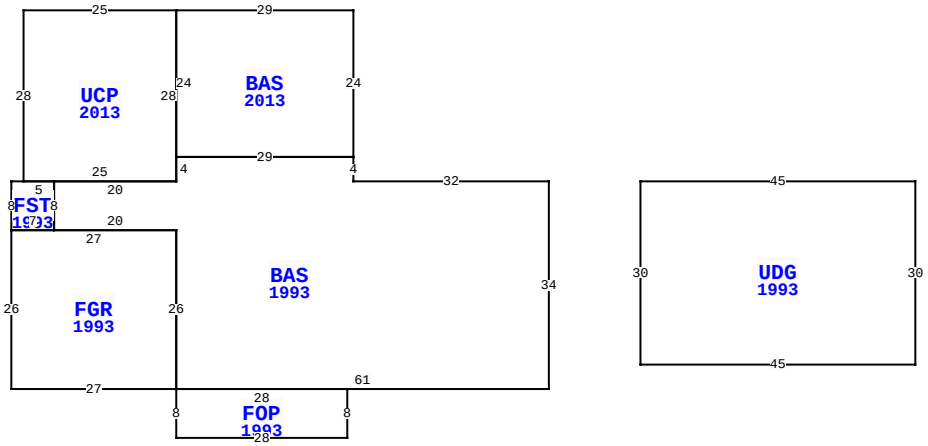

43154 WOODLAND LN, CALLAHAN

BLD DATE		LGL DATE	
XF DATE		LAND DATE	
INC DATE		AG DATE	

NASSAU COUNTY PROPERTY

PAGE 1 of 1 6

VALUATION SUMMARY

VALUATION BY		STANDARD
Tax Group: 6	Tax Dist:	
BUILDING MARKET VALUE		488,688
TOTAL MARKET OB/XF VALUE		37,421
TOTAL LAND VALUE - MARKET		50,400
TOTAL MARKET VALUE		576,509
SOH/AGL Deduction		317,793
ASSESSED VALUE		258,716
TOTAL EXEMPTION VALUE	HX HB	50,000
BASE TAXABLE VALUE		208,716
TOTAL JUST VALUE		576,509
NCON VALUE		0
INCOME VALUE		
PREVIOUS YEAR MKT VALUE		498,676

CALL FOR APPOINTMENT

PERMIT NUM	DESCRIPTION	AMT	ISSUED
B973815	SWIM POOL	14,500	04/01/1997
6144	NEW CONSTR	200	08/21/1989
3549	NEW CONSTR	49,256	08/08/1986

SALES DATA

OFF RECORD Number	DATE	TYPE INST	Q U	V I	RSN CD	SALE PRICE
0841/0266	7/15/1998	WD	U	I	07	100

GRANTOR: KENNEDY PEGGY BLACKSH
GRANTEE: BLACKSHEAR JOHN JR

0786/0090	3/03/1997	WD	U	I	07	100

GRANTOR: KENNEDY PEGGY J BLACK
GRANTEE: BLACKSHEAR JOHN JR

BUILDING NOTES

BUILDING DIMENSIONS

BAS=[YR=1993] W32 N4 BAS=[YR=2013] N24 W29 UCP=[YR=2013] W25 S28 FST=[YR=1993] W2 S8 FGR=[YR=1993] S26 E27 FOP=[YR=1993] S8 E28 N8 W28$ N26 W27$E7 N8 W5$ E25 N28$ S24 E29$ W29 S4 W20 S8 E20 S26 E61 N34$ PTR=E15 UDG=[YR=1993] E45 S30 W45 N30$ W15$.

EXTRA FEATURES

LN	OB/XF CODE	DESCRIPTION	BLD	CAP	L	W	UNITS	UT	Adj R	ADJ UNIT PRICE	ORIG COND	YEAR ON	YEAR ACTUAL	Q	% COND	OB/XF MKT VALUE	NOTES
1	0812	CONCRETE C	0	100	0	0	6,969.00	SF	4.00	4.00	100	1987	1987	3	52	14,496	
2	0500	FP-PRE FAB	0	100	0	0	1.00	UT	3,500.00	3,500.00	100	1987	1987	3	62	2,170	
3	0940	SHEDS/PORT	0	100	7	7	49.00	SF	30.00	30.00	100	1988	1988	3	20	294	
4	0861	POOL GUNIT	0	100	0	0	594.00	SF	85.00	85.00	100	1998	1998	3	21	10,603	
5	0845	KOOL DECK	0	100	0	0	954.00	SF	7.25	7.25	100	1998	1998	3	75	5,187	
6	0681	POLE SHED	0	100	15	45	675.00	SF	15.00	15.00	100	1996	1996	3	24	2,430	
7	0351	CARPORT MT	0	100	46	20	920.00	SF	6.60	6.60	100	2005	2005	3	24	1,457	
8	0751	UOP	0	100	0	0	196.00	SF	10.00	10.00	100	2005	2005	3	40	784	

LAND DESCRIPTION

TOTAL OB/XF 37,421

LN	USE CODE	CLS	LAND USE DESCRIPTION	CAP	RD	LOC ZONE	FRONT	DEPTH	TOT LND UTS	UNIT TYPE	DT	DPTH FACT	% COND	TOT ADJ	UNIT PRICE	ADJ UNIT PRICE	LAND VALUE	OTHER ADJUSTMENTS AND NOTES	YEAR	DENSITY	DECL	FRZ	YR	CONSRV
1	000100	C	SFR	100		OR	0.00	0.00	1.44	AC		1.00	1.00	1.00	35,000.00	35,000.00	50,400							

REVIEW DATE 05/14/2024 BY TWA Total Acres: 1.44 Total Land Value: 50,400 Market: 0 Agricultural: 0 Common: 50,400 PRINTED 08/06/2024 BY SYS