LOT 30
IN OR 2397/924
RATLIFF ACRES UNR

HAND VERNON D & HATTIE D L/E/
43390 RATLIFF ROAD
CALLAHAN, FL 32011

2024

16-1N-25-2900-0030-0000

NASSAU COUNTY PROPERTY

BUILDING CHARACTERISTICS

ELEMENT	CD	CONSTRUCTION
Exterior Wall	20	FACE BRICK 100
Roof Structur	03	GABLE/HIP 100
Roof Cover	12	MODULAR MT 100
Interior Wall	05	DRYWALL 100
Interior Floo	14	CARPET 80
Interior Floo	08	SHT VINYL 20
Air Condition	03	CENTRAL 100
Heating Type	04	AIR DUCTED 100
Bedrooms		3 100
Bathrooms		2 100
Frame	02	WOOD FRAME 100
Stories	1.	1. 100
Units		0 100
BUD8 Adjustme	06	DIST 1D 100
Occupancy	00	NONE 100
Quality	01	Quality Level 01

DOR CODE	0100	SINGLE FAMILY	
MAP NUM		MKT AREA	08
NEIGHBORHOOD/LOC	8005.00		

AREA TYPE	TOTAL GROSS AREA	PCT OF BASE	TOT ADJ AREA	SUBAREA MARKET VALUE
BAS	1,616	100	1,616	129,137
FEP	250	80	200	15,982
FGR	598	55	329	26,291
FOP	35	30	10	799
UDG	1,089	55	599	47,867
USP	375	30	112	8,950
TOTALS	3,963		2,866	229,027

MARKET ADJUSTMENTS

TYPE	MDL	EFF. AREA	TOT ADJ PTS	EFF. BASE RATE	REPL. COST NEW	AYB	EYB	ECON	FNCT		NORM	% COND
0900	01	2,866	93.0600	116.32	333,373	1977	1977	0	0	0	31.30	68.70

1 SNGL FAM – 100% - 0 Heated Area: 1616 HX Base Yr

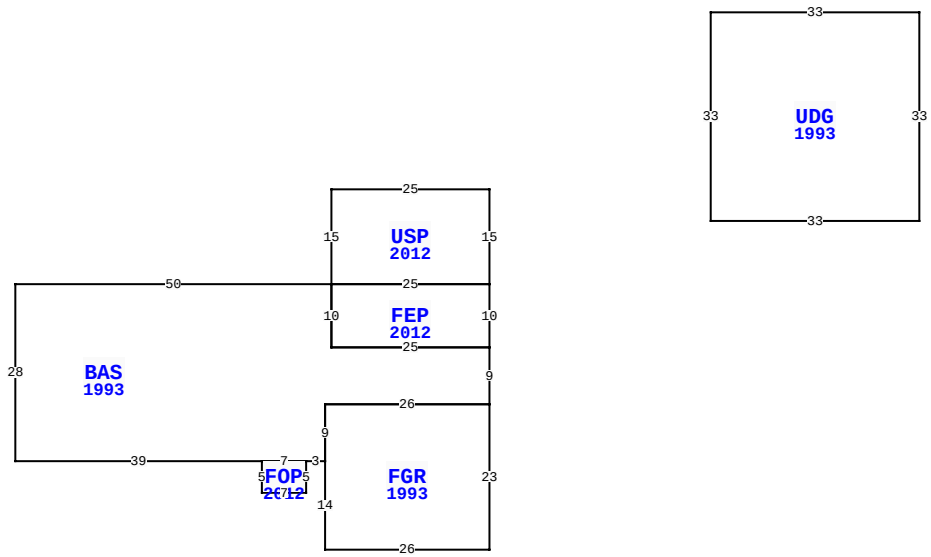

43390 RATLIFF RD, CALLAHAN

BLD DATE		LGL DATE	
XF DATE		LAND DATE	
INC DATE		AG DATE	

VALUATION SUMMARY

VALUATION BY		STANDARD
Tax Group: 6	Tax Dist:	
BUILDING MARKET VALUE		229,027
TOTAL MARKET OB/XF VALUE		12,118
TOTAL LAND VALUE - MARKET		70,920
TOTAL MARKET VALUE		312,065
SOH/AGL Deduction		147,356
ASSESSED VALUE		164,709
TOTAL EXEMPTION VALUE	HX HB	50,000
BASE TAXABLE VALUE		114,709
TOTAL JUST VALUE		312,065
NCON VALUE		10,496
INCOME VALUE		
PREVIOUS YEAR MKT VALUE		291,751

PERMIT NUM	DESCRIPTION	AMT	ISSUED
1703750	XFOB	14,206	06/01/2017

SALES DATA

OFF RECORD Number	DATE	TYPE INST	Q / U	V / I	RSN CD	SALE PRICE
2397/0924	10/02/2020	WD	U	I	11	100
GRANTOR: HAND VERNON D & HATTI						
GRANTEE: CARROLL CHARLENE D						
0491/0249	6/01/1986	WD	Q	I		85,500
GRANTOR:						
GRANTEE:						

BUILDING NOTES

BUILDING DIMENSIONS

BAS=[YR=1993;ORIG=-25,10] W50 S28 E39 E7 E3 N9 E26 N9 W25 N10 $
UDG=[YR=1993;ORIG=35,0] E33 N33 W33 S33 $
FGR=[YR=1993;ORIG=-26,38] S14 E26 N23 W26 S9 $
USP=[YR=2012;ORIG=0,-5] W25 S15 E25 N15 $
FEP=[YR=2012;ORIG=0,20] N10 W25 S10 E25 $
FOP=[YR=2012;ORIG=-36,38] S5 E7 N5 W7 $
PTR=[ORIG=0,0] E35 W35 $
.

EXTRA FEATURES

LN	OB/XF CODE	DESCRIPTION	BLD	CAP	L	W	UNITS	UT	Adj R	ADJ UNIT PRICE	ORIG COND	YEAR ON	YEAR ACTUAL	Q	% COND	OB/XF MKT VALUE	NOTES
1	0811	CONCRETE B	0	100	0	0	400.00	SF	5.20	5.20	100	1980	1980	3	32.5	676	
2	0811	CONCRETE B	0	100	0	0	560.00	SF	5.20	5.20	100	1980	1980	3	32.5	946	
3	0351	CARPORT MT	0	100	20	32	640.00	SF	10.00	10.00	100	2024	2018		82	5,248	
4	0351	CARPORT MT	0	100	20	32	640.00	SF	10.00	10.00	100	2024	2018		82	5,248	

LAND DESCRIPTION

TOTAL OB/XF 12,118

LN	USE CODE	CLS	LAND USE DESCRIPTION	CAP	RD	LOC ZONE	FRONT	DEPTH	TOT LND UTS	UNIT TYPE	DT	DPTH FACT	% COND	TOT ADJ	UNIT PRICE	ADJ UNIT PRICE	LAND VALUE	OTHER ADJUSTMENTS AND NOTES	YEAR	DENSITY	DECL	FRZ	YR	CONSRV
1	000115	C	SFR ACRES	100	0006	OR	0.00	0.00	3.94	AC		1.00	1.00	1.00	18,000.00	18,000.00	70,920							

REVIEW DATE 01/06/2023 BY KWA Total Acres: 3.94 Total Land Value: 70,920 Market: 0 Agricultural: 0 Common: 70,920 PRINTED 08/06/2024 BY SYS