IN OR 1646/802
PARCELS 1-2 & 1-10
65' S/W MH - RP133

HERREN WENDELL K JR & ADRIANA
55189 THOMAS RD
CALLAHAN, FL 32011

2024

15-2N-25-0000-0001-0020

BUILDING CHARACTERISTICS

ELEMENT	CD	CONSTRUCTION
Exterior Wall	10	ABOVE AVG 100
Roof Structur	03	GABLE/HIP 100
Roof Cover	03	COMP SHNGL 100
Interior Wall	05	DRYWALL 100
Interior Floo	12	HARDWOOD 50
Interior Floo	14	CARPET 50
Air Condition	03	CENTRAL 100
Heating Type	04	AIR DUCTED 100
Bedrooms		3 100
Bathrooms		2.5 100
Frame	02	WOOD FRAME 100
Stories	0	0 100
Units		0 100
Occupancy	00	NONE 100
Quality	03	Quality Level 03
DOR CODE	0100	SINGLE FAMILY
MAP NUM		MKT AREA 08
NEIGHBORHOOD/LOC	8026.00	

AREA TYPE	TOTAL GROSS AREA	PCT OF BASE	TOT ADJ AREA	SUBAREA MARKET VALUE
BAS	3,028	100	3,028	341,878
FOP	259	30	78	8,807
FOP	652	30	196	22,130
UDG	550	55	302	34,097
UUS	496	50	248	28,001
TOTALS	4,985		3,852	434,912

MARKET ADJUSTMENTS

TYPE	MDL	EFF. AREA	TOT ADJ PTS	EFF. BASE RATE	REPL. COST NEW	AYB	EYB	ECON	FNCT		NORM	% COND
0900	01	3,852	97.6500	122.06	470,175	2007	2007	0	0	0	7.50	92.50

2 SNGL FAM – 100% - 2010 Heated Area: 3028 HX Base Yr 2010

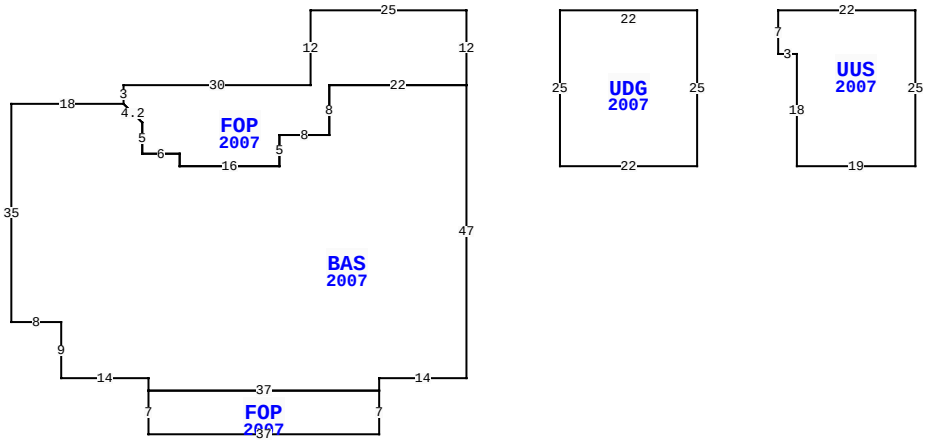

55189 THOMAS RD, CALLAHAN

BLD DATE	11/14/2007 DJ	LGL DATE	
XF DATE		LAND DATE	
INC DATE		AG DATE	

NASSAU COUNTY PROPERTY

PAGE 1 of 1 6

VALUATION SUMMARY

VALUATION BY		STANDARD
Tax Group: 6	Tax Dist:	
BUILDING MARKET VALUE		434,912
TOTAL MARKET OB/XF VALUE		9,426
TOTAL LAND VALUE - MARKET		48,300
TOTAL MARKET VALUE		492,638
SOH/AGL Deduction		253,967
ASSESSED VALUE		238,671
TOTAL EXEMPTION VALUE	HX HB	50,000
BASE TAXABLE VALUE		188,671
TOTAL JUST VALUE		492,638
NCON VALUE		0
INCOME VALUE		
PREVIOUS YEAR MKT VALUE		473,242

PERMIT NUM	DESCRIPTION	AMT	ISSUED
E18896	ELEC OTHER	2,000	03/01/2007
M12784	MECH OTHER	0	03/01/2007
C19361	NEW CONSTR	0	01/01/2007
B19361	NEW CONSTR	326,832	01/01/2007
P12046	OTHER	0	01/01/2007
R10040	REPAIR/RRF	6,800	01/01/2007

SALES DATA

OFF RECORD Number	DATE	TYPE INST	Q / U	V / I	RSN CD	SALE PRICE
1646/0802	10/22/2009	WD	U	I	12	240,000
GRANTOR: HOLT COLBY L & KIMBER						
GRANTEE: HERREN WENDELL K JR						
1416/1843	6/05/2006	WD	Q	I		64,000
GRANTOR: LAWRENCE DWAYNE D						
GRANTEE: HOLT COLBY L & KIMB						

BUILDING NOTES

BUILDING DIMENSIONS

FOP=[YR=2007] W25 S12 W30 S3 BAS=[YR=2007] W18 S35 E8 S9 E14 S2 FOP=[YR=2007] S7 E37 N7 W37$ E37 N2 E14 N47 W22 S8 W8 S5 W16 N2 W6 N5 U3 L3 $ D3 R3 S5 E6 S2 E16 N5 E8 N8 E22 N12$ PTR= E15 UDG=[YR=2007] E22 S25 W22 N25 $ W15 $ PTR= E50 UUS=[YR=2007] E22 S25 W19 N18 W3 N7 $ W50 $.

EXTRA FEATURES

LN	OB/XF CODE	DESCRIPTION	BLD	CAP	L	W	UNITS	UT	Adj R	ADJ UNIT PRICE	ORIG COND	YEAR ON	YEAR ACTUAL	Q	% COND	OB/XF MKT VALUE	NOTES
1	0812	CONCRETE C	0	100	0	0	1,835.00	SF	4.00	4.00	100	2008	2008	3	89	6,533	
2	0811	CONCRETE B	0	100	25	25	625.00	SF	5.20	5.20	100	2008	2008	3	89	2,893	

LAND DESCRIPTION

TOTAL OB/XF 9,426

LN	USE CODE	CLS	LAND USE DESCRIPTION	CAP	RD	LOC ZONE	FRONT	DEPTH	TOT LND UTS	UNIT TYPE	DT	DPTH FACT	% COND	TOT ADJ	UNIT PRICE	ADJ UNIT PRICE	LAND VALUE	OTHER ADJUSTMENTS AND NOTES	YEAR	DENSITY	DECL	FRZ	YR	CONSRV
1	000100	C	SFR	100		OR	0.00	0.00	1.38	AC		1.00	1.00	1.00	35,000.00	35,000.00	48,300							

REVIEW DATE 12/02/2019 BY TWA Total Acres: 1.38 Total Land Value: 48,300 Market: 0 Agricultural: 0 Common: 48,300 PRINTED 08/06/2024 BY SYS