PT GOVT LOT 1 OF SEC 11-4N-23E
IN OR 1845/1475 PAR 5-3 & PT
GOVT LOT 1 OF SEC 14-4N-23E

FIRST BAPTIST CHURCH INC OF BOULOUGNE FLORIDA
28226 CHURCH DRIVE
HILLIARD, FL 32046

2024

14-4N-23-0000-0001-0020

BUILDING CHARACTERISTICS

ELEMENT	CD	CONSTRUCTION
Exterior Wall	20	FACE BRICK 100
Roof Structur	04	WOOD TRUSS 100
Roof Cover	03	COMP SHNGL 100
Interior Wall	05	DRYWALL 100
Interior Floo	07	CORK/VTILE 100
Ceiling	01	FIN.SUSPD 100
Air Condition	03	CENTRAL 100
Heating Type	04	AIR DUCTED 100
Fixtures		17 100
Frame	02	WOOD FRAME 100
Story Height		10 100
RMS		3 100
Stories	1.	1. 100
Units		0 100
Occupancy	00	NONE 100
Quality	03	Quality Level 03
DOR CODE	7100	CHURCHES
MAP NUM		MKT AREA 09
NEIGHBORHOOD/LOC	9001.00	

AREA TYPE	TOTAL GROSS AREA	PCT OF BASE	TOT ADJ AREA	SUBAREA MARKET VALUE
BAS	7,235	100	7,235	664,969
CAN	370	30	111	10,202
TOTALS	7,605		7,346	675,171

MARKET ADJUSTMENTS

TYPE	MDL	EFF. AREA	TOT ADJ PTS	EFF. BASE RATE	REPL. COST NEW	AYB	EYB	ECON	FNCT		NORM	% COND
7102	04	7,346	91.2000	101.00	741,946	1995	1995	0	0	0	9.00	91.00

1 EDU RELGUS – 0% - 0 Heated Area: 7235 HX Base Yr

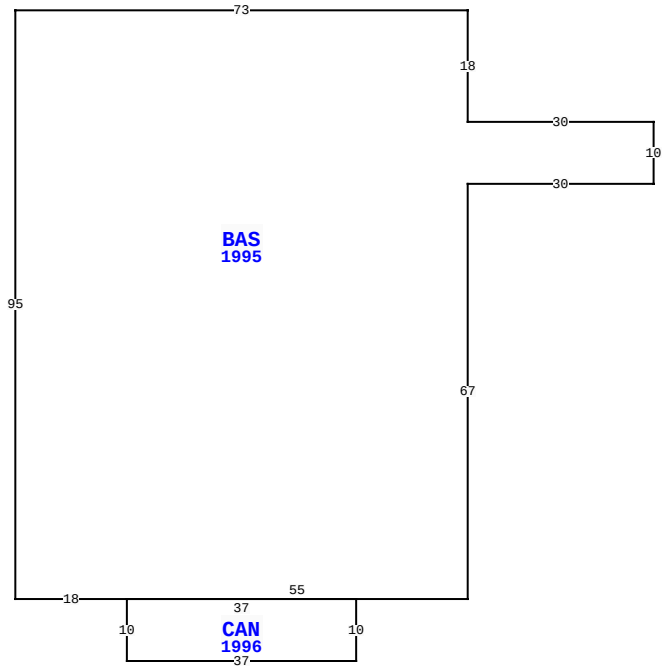

BLD DATE	02/22/2018 KK	LGL DATE	
XF DATE		LAND DATE	
INC DATE		AG DATE	

28226 CHURCH DR, HILLIARD

NASSAU COUNTY PROPERTY

PAGE 1 of 4 4

VALUATION SUMMARY

VALUATION BY		STANDARD
Tax Group: 4	Tax Dist:	
BUILDING MARKET VALUE		3,983,412
TOTAL MARKET OB/XF VALUE		113,328
TOTAL LAND VALUE - MARKET		115,078
TOTAL MARKET VALUE		4,211,818
SOH/AGL Deduction		1,300,426
ASSESSED VALUE		2,911,392
TOTAL EXEMPTION VALUE	02	2,911,392
BASE TAXABLE VALUE		0
TOTAL JUST VALUE		4,211,818
NCON VALUE		0
INCOME VALUE		
PREVIOUS YEAR MKT VALUE		4,450,104

PERMIT NUM	DESCRIPTION	AMT	ISSUED
22017176	REPAIR/RRF	14,400	11/18/2022
M95999	FIRE SPRNK	5,900	03/03/1995
B951668	NEW CONSTR	6,000	02/01/1995
M94872	H/AC	0	12/01/1994

SALES DATA

OFF RECORD Number	DATE	TYPE INST	Q U	V I	RSN CD	SALE PRICE
1845/1475	3/15/2013	WD	U	I	11	100
GRANTOR: JOHNSON CONNIE TRUSTE						
GRANTEE: FIRST BAPTIST CHURC						
1390/1749	2/01/2006	WD	U	I	06	100
GRANTOR: JOHNSON CONNIE TRUSTE						
GRANTEE: FIRST BAPTIST CHURC						

BUILDING NOTES

BUILDING DIMENSIONS

BAS=[YR=1995;ORIG=0,0] W30 N18 W73 S95 E18 E55 N67 E30 N10 $
CAN=[YR=1996;ORIG=-85,77] S10 E37 N10 W37 $
.

EXTRA FEATURES

LN	OB/XF CODE	DESCRIPTION	BLD	CAP	L	W	UNITS	UT	Adj R	ADJ UNIT PRICE	ORIG COND	YEAR ON	YEAR ACTUAL	Q	% COND	OB/XF MKT VALUE	NOTES
1	0810	CONCRETE A	0	0	0	0	150.00	SF	6.50	6.50	100	1995	1995	3	70	683	
2	0785	MOV-PR-WAL	0	0	0	0	303.00	SF	450.00	450.00	100	1995	1995	3	20	27,270	
3	0812	CONCRETE C	0	0	0	0	4,373.00	SF	4.00	4.00	100	2006	2006	3	87	15,218	
4	0803	ASPHALT C	0	0	0	0	8,250.00	SF	2.00	2.00	100	2006	2006	3	58	9,570	
5	0810	CONCRETE A	0	0	0	0	4,032.00	SF	6.50	6.50	100	1987	1987	3	52	13,628	
6	0940	SHEDS/PORT	0	0	14	10	140.00	SF	30.00	30.00	100	1980	1980	3	20	840	
7	0940	SHEDS/PORT	0	0	16	12	192.00	SF	21.30	21.30	100	1991	1991	3	20	818	
8	0940	SHEDS/PORT	0	0	14	10	140.00	SF	21.30	21.30	100	1991	1991	3	20	596	
9	0812	CONCRETE C	0	0	0	0	2,377.00	SF	4.00	4.00	100	2006	2006	3	87	8,272	
10	0803	ASPHALT C	0	0	0	0	21,746.00	SF	2.00	2.00	100	2006	2006	3	58	25,225	

TOTAL OB/XF 102,120

LAND DESCRIPTION

LN	USE CODE	CLS	LAND USE DESCRIPTION	CAP	RD	LOC ZONE	FRONT	DEPTH	TOT LND UTS	UNIT TYPE	DT	DPTH FACT	% COND	TOT ADJ	UNIT PRICE	ADJ UNIT PRICE	LAND VALUE	OTHER ADJUSTMENTS AND NOTES	YEAR	DENSITY	DECL	FRZ	YR	CONSRV
1	007100	C	CHURCH	0		OR	0.00	0.00	5.75	AC		1.00	1.00	1.00	20,000.00	20,000.00	115,000							
2	009602	C	RETENTION PO	0		OR	0.00	0.00	0.78	AC		1.00	1.00	1.00	100.00	100.00	78							

REVIEW DATE 02/15/2024 BY KBA Total Acres: 6.53 Total Land Value: 115,078 Market: 0 Agricultural: 0 Common: 115,078 PRINTED 08/06/2024 BY SYS

PT GOVT LOT 1 OF SEC 11-4N-23E
IN OR 1845/1475 PAR 5-3 & PT
GOVT LOT 1 OF SEC 14-4N-23E

FIRST BAPTIST CHURCH INC OF BOULOUGNE FLORIDA
28226 CHURCH DRIVE
HILLIARD, FL 32046

2024

14-4N-23-0000-0001-0020

BUILDING CHARACTERISTICS

ELEMENT	CD	CONSTRUCTION
Exterior Wall	25	MOD METAL 60
Exterior Wall	17	CB STUCCO 40
Roof Structur	10	STEEL FRME 100
Roof Cover	12	MODULAR MT 100
Interior Wall	05	DRYWALL 100
Interior Floo	14	CARPET 90
Interior Floo	11	CLAY TILE 10
Ceiling	01	FIN.SUSPD 100
Air Condition	03	CENTRAL 100
Heating Type	04	AIR DUCTED 100
Fixtures		17 100
Frame	05	STEEL 100
Story Height		17 100
RMS		4 100
Stories	2.	2. 100
Units		0 100
Occupancy	00	NONE 100
Quality	04	Quality Level 04
DOR CODE	7100	CHURCHES
MAP NUM		MKT AREA 09
NEIGHBORHOOD/LOC	9001.00	

AREA TYPE	TOTAL GROSS AREA	PCT OF BASE	TOT ADJ AREA	SUBAREA MARKET VALUE
BAS	14,522	100	14,522	2,390,445
CAN	320	30	96	15,802
FUS	1,728	100	1,728	284,443
UST	108	40	43	7,078
UST	136	40	54	8,889
UST	414	40	166	27,325
UST	426	40	170	27,983
TOTALS	17,654		16,779	2,761,966

MARKET ADJUSTMENTS

TYPE	MDL	EFF. AREA	TOT ADJ PTS	EFF. BASE RATE	REPL. COST NEW	AYB	EYB	ECON	FNCT		NORM	% COND
7101	04	16,779	114.9510	179.90	3,018,542	2006	2006	0	0	0	8.50	91.50

2 CHURCH – 0% - 0 Heated Area: 16250 HX Base Yr

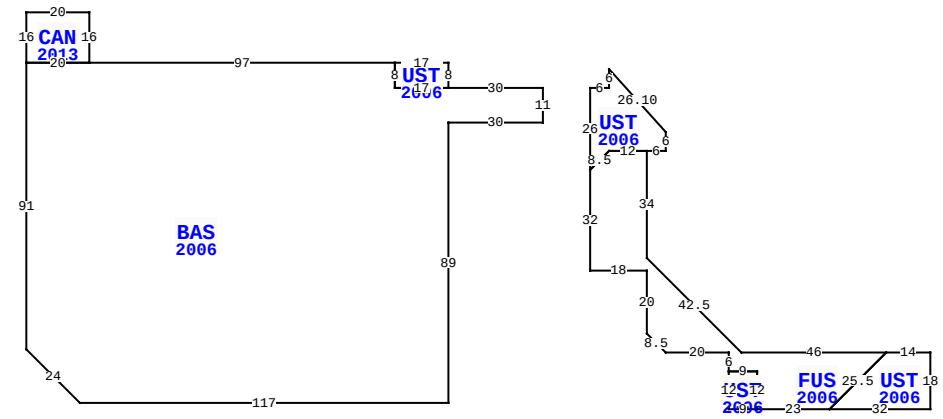

28226 CHURCH DR, HILLIARD

BLD DATE	02/22/2018 KK	LGL DATE	
XF DATE		LAND DATE	
INC DATE		AG DATE	

NASSAU COUNTY PROPERTY

PAGE 2 of 4 4

VALUATION SUMMARY

VALUATION BY		STANDARD
Tax Group: 4	Tax Dist:	
BUILDING MARKET VALUE		3,983,412
TOTAL MARKET OB/XF VALUE		113,328
TOTAL LAND VALUE - MARKET		115,078
TOTAL MARKET VALUE		4,211,818
SOH/AGL Deduction		1,300,426
ASSESSED VALUE		2,911,392
TOTAL EXEMPTION VALUE	02	2,911,392
BASE TAXABLE VALUE		0
TOTAL JUST VALUE		4,211,818
NCON VALUE		0
INCOME VALUE		
PREVIOUS YEAR MKT VALUE		4,450,104

PERMIT NUM	DESCRIPTION	AMT	ISSUED

SALES DATA

OFF RECORD Number	DATE	TYPE INST	Q / U	V / I	RSN CD	SALE PRICE
1845/1475	3/15/2013	WD	U	I	11	100
GRANTOR: JOHNSON CONNIE TRUSTE						
GRANTEE: FIRST BAPTIST CHURC						
1390/1749	2/01/2006	WD	U	I	06	100
GRANTOR: JOHNSON CONNIE TRUSTE						
GRANTEE: FIRST BAPTIST CHURC						

BUILDING NOTES

BUILDING DIMENSIONS

BAS=[YR=2006;ORIG=0,0] W30 W17 N8 W97 W20 S91 D17R17 E117 N89 E30 N11 $
FUS=[YR=2006;ORIG=15,26] S32 E18 S20 D6R6 E20 S6 E9 S12 E23 U18R18 W46 U30L30 N34 W12 D6L6 $
UST=[YR=2006;ORIG=15,0] S26 U6R6 E12 E6 N6 U20L18 S6 W6 $
UST=[YR=2006;ORIG=91,102] E32 N18 W14 D18L18 $
CAN=[YR=2013;ORIG=-144,-8] N16 W20 S16 E20 $
UST=[YR=2006;ORIG=-30,0] N8 W17 S8 E17 $
UST=[YR=2006;ORIG=59,90] S12 E9 N12 W9 $
PTR=[ORIG=0,0] E15 W15 $
.

EXTRA FEATURES

LN	OB/XF CODE	DESCRIPTION	BLD	CAP	L	W	UNITS	UT	Adj R	ADJ UNIT PRICE	ORIG COND	YEAR ON	YEAR ACTUAL	Q	% COND	OB/XF MKT VALUE	NOTES
11	0351	CARPORT MT	0	0	48	20	960.00	SF	6.60	6.60	100	2008	2008	3	35	2,218	
12	0351	CARPORT MT	0	0	20	18	360.00	SF	6.60	6.60	100	2007	2007	3	31	737	
13	0402	CONC BUMPE	0	0	0	0	5.00	UT	25.00	25.00	100	2007	2007	3	91	114	
14	0978	SECURTY LT	0	0	0	0	6.00	UT	450.00	450.00	100	2006	2006	3	69	1,863	
15	0476	VF 6 SBPL	0	0	0	0	30.00	LF	32.00	32.00	100	2013	2013	3	85	816	
16	0422	CL FNC 4'	0	0	0	0	700.00	LF	15.00	15.00	100	2000	2000	3	52	5,460	

LAND DESCRIPTION

TOTAL OB/XF 11,208

LN	USE CODE	CLS	LAND USE DESCRIPTION	CAP	RD	LOC ZONE	FRONT	DEPTH	TOT LND UTS	UNIT TYPE	DT	DPTH FACT	% COND	TOT ADJ	UNIT PRICE	ADJ UNIT PRICE	LAND VALUE	OTHER ADJUSTMENTS AND NOTES	YEAR	DENSITY	DECL	FRZ	YR	CONSRV

REVIEW DATE 02/15/2024 BY KBA Total Acres: 6.53 Total Land Value: 115,078 Market: 0 Agricultural: 0 Common: 115,078 PRINTED 08/06/2024 BY SYS

PT GOVT LOT 1 OF SEC 11-4N-23E
IN OR 1845/1475 PAR 5-3 & PT
GOVT LOT 1 OF SEC 14-4N-23E

FIRST BAPTIST CHURCH INC OF BOULOUGNE FLORIDA
28226 CHURCH DRIVE
HILLIARD, FL 32046

2024

14-4N-23-0000-0001-0020

BUILDING CHARACTERISTICS

ELEMENT	CD	CONSTRUCTION
Exterior Wall	19	COMMON BRK 100
Roof Structur	03	GABLE/HIP 100
Roof Cover	03	COMP SHNGL 100
Interior Wall	05	DRYWALL 100
Interior Floo	14	CARPET 100
Air Condition	03	CENTRAL 100
Heating Type	04	AIR DUCTED 100
Bedrooms		3 100
Bathrooms		2 100
Frame	03	MASONRY 100
Stories	1.	1. 100
Units		0 100
Occupancy	00	NONE 100
Quality	03	Quality Level 03
DOR CODE	7100	CHURCHES
MAP NUM		MKT AREA 09
NEIGHBORHOOD/LOC	9001.00	

AREA TYPE	TOTAL GROSS AREA	PCT OF BASE	TOT ADJ AREA	SUBAREA MARKET VALUE
BAS	1,387	100	1,387	112,610
FCP	260	25	65	5,277
FSP	147	40	59	4,790
FST	117	55	64	5,196
PTO	224	5	11	893
TOTALS	2,135		1,586	128,767

MARKET ADJUSTMENTS

TYPE	MDL	EFF. AREA	TOT ADJ PTS	EFF. BASE RATE	REPL. COST NEW	AYB	EYB	ECON	FNCT		NORM	% COND
0100	01	1,586	128.5200	122.09	193,635	1976	1976	0	0	0	33.50	66.50

3 SINGLE FAM – 0% - 0 Heated Area: 1387 HX Base Yr

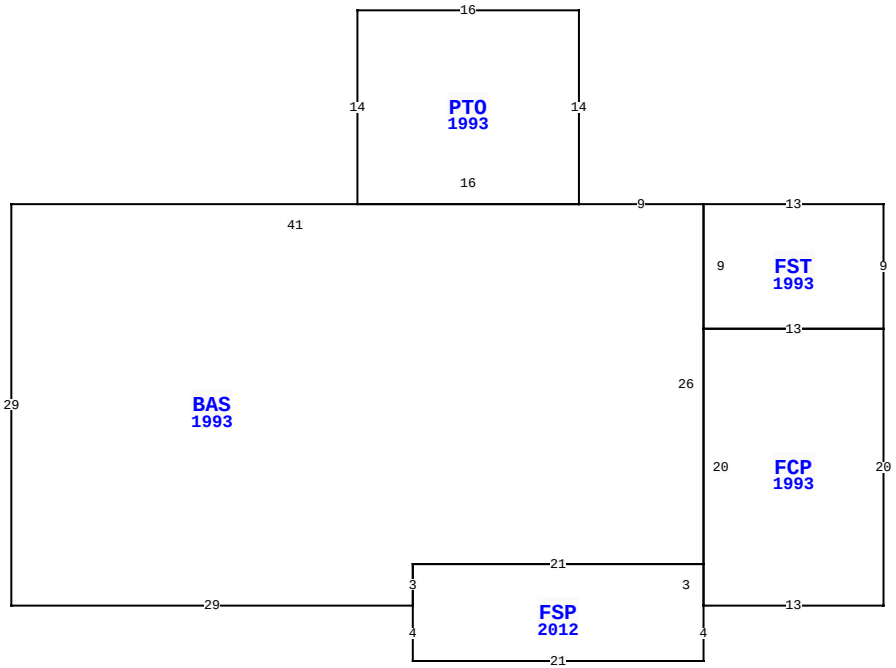

28226 CHURCH DR, HILLIARD

BLD DATE	02/22/2018	KK	LGL DATE
XF DATE			LAND DATE
INC DATE			AG DATE

NASSAU COUNTY PROPERTY

PAGE 3 of 4 4

VALUATION SUMMARY

VALUATION BY		STANDARD
Tax Group: 4	Tax Dist:	
BUILDING MARKET VALUE		3,983,412
TOTAL MARKET OB/XF VALUE		113,328
TOTAL LAND VALUE - MARKET		115,078
TOTAL MARKET VALUE		4,211,818
SOH/AGL Deduction		1,300,426
ASSESSED VALUE		2,911,392
TOTAL EXEMPTION VALUE	02	2,911,392
BASE TAXABLE VALUE		0
TOTAL JUST VALUE		4,211,818
NCON VALUE		0
INCOME VALUE		
PREVIOUS YEAR MKT VALUE		4,450,104

PERMIT NUM	DESCRIPTION	AMT	ISSUED

SALES DATA

OFF RECORD Number	DATE	TYPE INST	Q / U	V / I	RSN CD	SALE PRICE
1845/1475	3/15/2013	WD	U	I	11	100
GRANTOR: JOHNSON CONNIE TRUSTE						
GRANTEE: FIRST BAPTIST CHURC						
1390/1749	2/01/2006	WD	U	I	06	100
GRANTOR: JOHNSON CONNIE TRUSTE						
GRANTEE: FIRST BAPTIST CHURC						

BUILDING NOTES

BUILDING DIMENSIONS

FST=[YR=1993] W13 BAS=[YR=1993] W9 PTO=[YR=1993] N14 W16 S14 E16$ W41 S29 E29 FSP=[YR=2012] S4 E21 N4 FCP=[YR=1993] E13 N20 W13 S20$ N3 W21 S3 $ N3 E21 N26$ S9 E13 N9 $.

EXTRA FEATURES

LN	OB/XF CODE	DESCRIPTION	BLD	CAP	L	W	UNITS	UT	Adj R	ADJ UNIT PRICE	ORIG COND	YEAR ON	YEAR ACTUAL	Q	% COND	OB/XF MKT VALUE	NOTES

LAND DESCRIPTION

TOTAL OB/XF 0

LN	USE CODE	CLS	LAND USE DESCRIPTION	CAP	RD	LOC ZONE	FRONT	DEPTH	TOT LND UTS	UNIT TYPE	DT	DPTH FACT	% COND	TOT ADJ	UNIT PRICE	ADJ UNIT PRICE	LAND VALUE	OTHER ADJUSTMENTS AND NOTES	YEAR	DENSITY	DECL	FRZ	YR	CONSRV

REVIEW DATE 02/15/2024 BY KBA Total Acres: 6.53 Total Land Value: 115,078 Market: 0 Agricultural: 0 Common: 115,078 PRINTED 08/06/2024 BY SYS

PT GOVT LOT 1 OF SEC 11-4N-23E
IN OR 1845/1475 PAR 5-3 & PT
GOVT LOT 1 OF SEC 14-4N-23E

FIRST BAPTIST CHURCH INC OF BOULOUGNE FLORIDA
28226 CHURCH DRIVE
HILLIARD, FL 32046

2024

14-4N-23-0000-0001-0020

BUILDING CHARACTERISTICS

ELEMENT	CD	CONSTRUCTION
Exterior Wall	15	CONC BLOCK 100
Roof Structur	04	WOOD TRUSS 100
Roof Cover	12	MODULAR MT 100
Interior Wall	05	DRYWALL 100
Interior Floo	14	CARPET 100
Ceiling	01	FIN.SUSPD 100
Air Condition	03	CENTRAL 100
Heating Type	04	AIR DUCTED 100
Fixtures		6 100
Frame	03	MASONRY 100
Story Height		10 100
RMS		1 100
Stories	1.	1. 100
Units		0 100
Occupancy	00	NONE 100
Quality	03	Quality Level 03
DOR CODE	7100	CHURCHES
MAP NUM		MKT AREA 09
NEIGHBORHOOD/LOC	9001.00	

AREA TYPE	TOTAL GROSS AREA	PCT OF BASE	TOT ADJ AREA	SUBAREA MARKET VALUE
BAS	8,124	100	8,124	406,160
CAN	80	30	24	1,200
FCP	512	30	154	7,699
FDU	81	60	49	2,450
TOTALS	8,797		8,351	417,508

MARKET ADJUSTMENTS

TYPE	MDL	EFF. AREA	TOT ADJ PTS	EFF. BASE RATE	REPL. COST NEW	AYB	EYB	ECON	FNCT		NORM	% COND
7102	04	8,351	90.2880	99.99	835,016	1960	1960	0	0	0	50.00	50.00

4 EDU RELGUS – 0% - 0 Heated Area: 8124 HX Base Yr

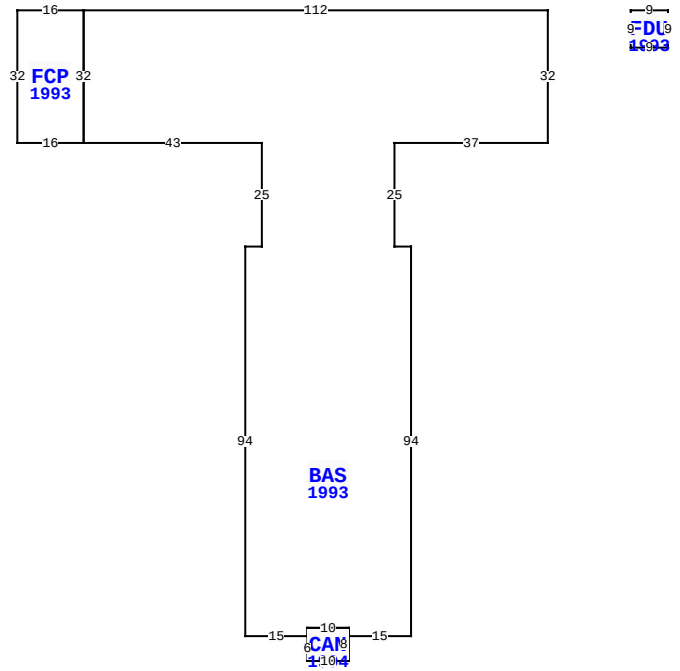

28226 CHURCH DR, HILLIARD

BLD DATE	02/22/2018 KK	LGL DATE	
XF DATE		LAND DATE	
INC DATE		AG DATE	

NASSAU COUNTY PROPERTY

PAGE 4 of 4 4

VALUATION SUMMARY

VALUATION BY		STANDARD
Tax Group: 4	Tax Dist:	
BUILDING MARKET VALUE		3,983,412
TOTAL MARKET OB/XF VALUE		113,328
TOTAL LAND VALUE - MARKET		115,078
TOTAL MARKET VALUE		4,211,818
SOH/AGL Deduction		1,300,426
ASSESSED VALUE		2,911,392
TOTAL EXEMPTION VALUE	02	2,911,392
BASE TAXABLE VALUE		0
TOTAL JUST VALUE		4,211,818
NCON VALUE		0
INCOME VALUE		
PREVIOUS YEAR MKT VALUE		4,450,104

PERMIT NUM	DESCRIPTION	AMT	ISSUED

SALES DATA

OFF RECORD Number	DATE	TYPE INST	Q U	V I	RSN CD	SALE PRICE
1845/1475	3/15/2013	WD	U	I	11	100
GRANTOR: JOHNSON CONNIE TRUSTE						
GRANTEE: FIRST BAPTIST CHURC						
1390/1749	2/01/2006	WD	U	I	06	100
GRANTOR: JOHNSON CONNIE TRUSTE						
GRANTEE: FIRST BAPTIST CHURC						

BUILDING NOTES

BUILDING DIMENSIONS

BAS=[YR=1993;ORIG=0,0] W112 S32 E43 S25 W4 S94 E15 N2 E10 S2 E15 N94 W4 N25 E37 N32 $
FCP=[YR=1993;ORIG=-112,0] W16 S32 E16 N32 $
FDU=[YR=1993;ORIG=20,0] E9 S9 W9 N9 $
CAN=[YR=1994;ORIG=-58,151] S6 E10 N8 W10 S2 $
PTR=[ORIG=0,0] E20 W20 $
.

EXTRA FEATURES

L N	OB/XF CODE	DESCRIPTION	BLD	CAP	L	W	UNITS	UT	Adj R	ADJ UNIT PRICE	ORIG COND	YEAR ON	YEAR ACTUAL	Q	% COND	OB/XF MKT VALUE	NOTES

LAND DESCRIPTION

TOTAL OB/XF 0

L N	USE CODE	CLS	LAND USE DESCRIPTION	CAP	R D	LOC ZONE	FRONT	DEPTH	TOT LND UTS	UNIT TYPE	D T	DPTH FACT	% COND	TOT ADJ	UNIT PRICE	ADJ UNIT PRICE	LAND VALUE	OTHER ADJUSTMENTS AND NOTES	YEAR	DENSITY	DECL	FRZ	YR	CONSRV

REVIEW DATE 02/15/2024 BY KBA Total Acres: 6.53 Total Land Value: 115,078 Market: 0 Agricultural: 0 Common: 115,078 PRINTED 08/06/2024 BY SYS