SUB LOT 32
IN OR 2621/1561
SUB OF GOVT LOT 9 UNR

NELSON CHARLES G & SUSAN B L/E/
75346 EDWARDS ROAD
YULEE, FL 32097

**2024**

**14-2N-26-4280-0012-0000**

## NASSAU COUNTY PROPERTY



## BUILDING CHARACTERISTICS

| ELEMENT | CD | CONSTRUCTION |
|---|---|---|
| Exterior Wall | 05 | AVERAGE 100 |
| Roof Structur | 03 | GABLE/HIP 100 |
| Roof Cover | 03 | COMP SHNGL 100 |
| Interior Wall | 05 | DRYWALL 100 |
| Interior Floo | 14 | CARPET 80 |
| Interior Floo | 08 | SHT VINYL 20 |
| Air Condition | 02 | WINDOW 100 |
| Heating Type | 04 | AIR DUCTED 100 |
| Bedrooms | | 3 100 |
| Bathrooms | | 2 100 |
| Frame | 02 | WOOD FRAME 100 |
| Stories | 2. | 2. 100 |
| Units | | 0 100 |
| BUD8 Adjustme | 04 | DIST 01 100 |
| Occupancy | 00 | NONE 100 |
| Quality | 03 | Quality Level 03 |
| DOR CODE | 0100 | SINGLE FAMILY |
| MAP NUM | | MKT AREA 05 |
| NEIGHBORHOOD/LOC | 5001.00 | |

| AREA TYPE | TOTAL GROSS AREA | PCT OF BASE | TOT ADJ AREA | SUBAREA MARKET VALUE |
|---|---|---|---|---|
| BAL | 144 | 15 | 22 | 1,714 |
| BAS | 874 | 100 | 874 | 68,085 |
| BAS | 360 | 100 | 360 | 28,044 |
| FOP | 24 | 30 | 7 | 545 |
| FUS | 396 | 100 | 396 | 30,848 |
| UDU | 220 | 55 | 121 | 9,426 |
| UOP | 144 | 20 | 29 | 2,259 |
| UOP | 160 | 20 | 32 | 2,493 |
| TOTALS | 2,322 | | 1,841 | 143,414 |

## MARKET ADJUSTMENTS

| TYPE | MDL | EFF. AREA | TOT ADJ PTS | EFF. BASE RATE | REPL. COST NEW | AYB | EYB | ECON | FNCT | | NORM | % COND |
|---|---|---|---|---|---|---|---|---|---|---|---|---|
| 0100 | 01 | 1,841 | 100.0000 | 95.00 | 174,895 | 1962 | 1980 | 0 | 0 | 0 | 18.00 | 82.00 |

1 SINGLE FAM – 100% - 1986 Heated Area: 1630 HX Base Yr 1986

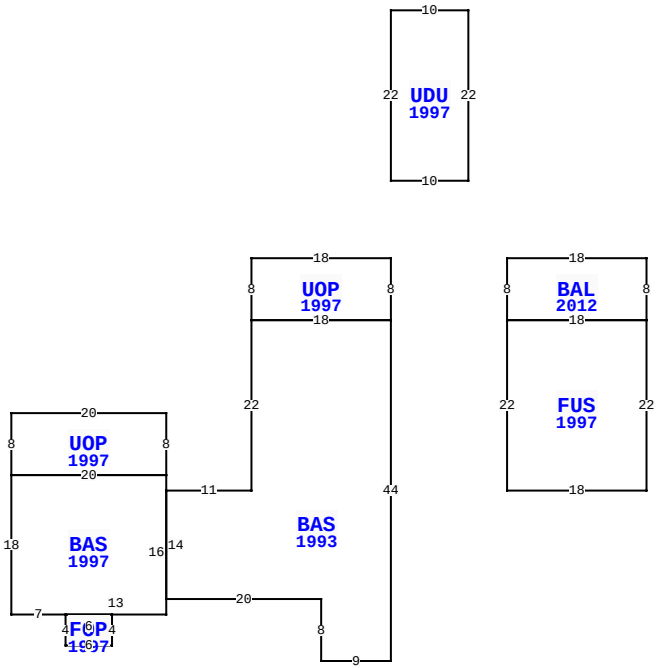


75346 EDWARDS RD, YULEE

| | | | |
|---|---|---|---|
| BLD DATE | | LGL DATE | |
| XF DATE | | LAND DATE | |
| INC DATE | | AG DATE | |

## NASSAU COUNTY PROPERTY — VALUATION SUMMARY

| | | |
|---|---|---|
| VALUATION BY | | STANDARD |
| Tax Group: 4 | Tax Dist: | |
| BUILDING MARKET VALUE | | 143,414 |
| TOTAL MARKET OB/XF VALUE | | 25,630 |
| TOTAL LAND VALUE - MARKET | | 110,000 |
| TOTAL MARKET VALUE | | 279,044 |
| SOH/AGL Deduction | | 150,876 |
| ASSESSED VALUE | | 128,168 |
| TOTAL EXEMPTION VALUE | HX HB | 50,000 |
| BASE TAXABLE VALUE | | 78,168 |
| TOTAL JUST VALUE | | 279,044 |
| NCON VALUE | | 0 |
| INCOME VALUE | | |
| PREVIOUS YEAR MKT VALUE | | 272,742 |

| PERMIT NUM | DESCRIPTION | AMT | ISSUED |
|---|---|---|---|
| 963221 | CHNGE SRVC | 0 | 11/01/1996 |

## SALES DATA

| OFF RECORD Number | DATE | TYPE INST | Q U | V I | RSN CD | SALE PRICE |
|---|---|---|---|---|---|---|
| 2621/1561 | 2/24/2023 | LE | U | I | 11 | 100 |
| GRANTOR: NELSON CHARLES G & SU | | | | | | |
| GRANTEE: NELSON THOMAS D & D | | | | | | |
| 1176/1060 | 10/01/2003 | QC | U | I | 01 | 100 |
| GRANTOR: NELSON SUSAN B | | | | | | |
| GRANTEE: NELSON CHARLES G & | | | | | | |

## BUILDING NOTES

## BUILDING DIMENSIONS

UOP=[YR=1997] W18 S8 BAS=[YR=1993] S22 W11 BAS=[YR=1997] N2 UOP=[YR=1997] N8 W20 S8 E20$ W20 S18 E7 FOP=[YR=1997] S4 E6 N4 W6$ E13 N16$ S14 E20 S8 E9 N44 W18$ E18 N8$ PTR=E15 BAL=[YR=2012] E18 S8 FUS=[YR=1997] S22 W18 N22 E18$ W18 N8$ W15$ PTR=N10 UDU=[YR=1997] N22 E10 S22 W10$ S10$.

## EXTRA FEATURES

| LN | OB/XF CODE | DESCRIPTION | BLD | CAP | L | W | UNITS | UT | Adj R | ADJ UNIT PRICE | ORIG COND | YEAR ON | YEAR ACTUAL | Q | % COND | OB/XF MKT VALUE | NOTES |
|---|---|---|---|---|---|---|---|---|---|---|---|---|---|---|---|---|---|
| 1 | 0940 | SHEDS/PORT | 0 | 100 | 8 | 10 | 80.00 | SF | 30.00 | 30.00 | 100 | 1982 | 1982 | 3 | 20 | 480 | |
| 2 | 0500 | FP-PRE FAB | 0 | 100 | 0 | 0 | 1.00 | UT | 3,500.00 | 3,500.00 | 100 | 1997 | 1997 | 3 | 80 | 2,800 | |
| 3 | 0940 | SHEDS/PORT | 0 | 100 | 8 | 10 | 80.00 | SF | 30.00 | 30.00 | 100 | 1990 | 1990 | 3 | 20 | 480 | |
| 4 | 0920 | CWALL-WD/M | 0 | 100 | 0 | 0 | 97.00 | LF | 390.00 | 390.00 | 100 | 1990 | 1990 | 3 | 20 | 7,566 | |
| 5 | 0812 | CONCRETE C | 0 | 100 | 0 | 0 | 1,456.00 | SF | 4.00 | 4.00 | 100 | 1997 | 1997 | 3 | 73 | 4,252 | |
| 6 | 1242 | WD DECK A | 0 | 100 | 0 | 0 | 150.00 | SF | 10.00 | 10.00 | 100 | 1997 | 1997 | 3 | 20 | 300 | |
| 7 | 0812 | CONCRETE C | 0 | 100 | 0 | 0 | 1,180.00 | SF | 4.00 | 4.00 | 100 | 1999 | 1999 | 3 | 77 | 3,634 | |
| 8 | 0351 | CARPORT MT | 0 | 100 | 24 | 22 | 528.00 | SF | 8.50 | 8.50 | 100 | 1999 | 1999 | 3 | 20 | 898 | |
| 9 | 0300 | BOAT DCK W | 0 | 100 | 6 | 12 | 72.00 | SF | 40.00 | 40.00 | 100 | 2014 | 2014 | 3 | 75 | 2,160 | |
| 10 | 0300 | BOAT DCK W | 0 | 100 | 6 | 17 | 102.00 | SF | 40.00 | 40.00 | 100 | 2014 | 2014 | 3 | 75 | 3,060 | |

TOTAL OB/XF 25,630

## LAND DESCRIPTION

| LN | USE CODE | CLS | LAND USE DESCRIPTION | CAP | RD | LOC ZONE | FRONT | DEPTH | TOT LND UTS | UNIT TYPE | DT | DPTH FACT | % COND | TOT ADJ | UNIT PRICE | ADJ UNIT PRICE | LAND VALUE | OTHER ADJUSTMENTS AND NOTES | YEAR | DENSITY | DECL | FRZ | YR | CONSRV |
|---|---|---|---|---|---|---|---|---|---|---|---|---|---|---|---|---|---|---|---|---|---|---|---|---|
| 1 | 000130 | C | SFR WATER | 100 | | RM | 93.00 | 240.00 | 1.00 | LT | | 1.00 | 1.00 | 1.00 | 110,000.00 | 110,000.00 | 110,000 | | | | | | | |

REVIEW DATE 05/12/2019 BY KBA Total Acres: 0.00 Total Land Value: 110,000 Market: 0 Agricultural: 0 Common: 110,000 PRINTED 08/06/2024 BY SYS