LOT 94
HAMPTON LAKES PHASE IV-A
OR 2343/796

JECKERT JAMES
85475 FALL RIVER PARKWAY
FERNANDINA BEACH, FL 32034

2024

13-2N-27-0723-0094-0000

NASSAU COUNTY PROPERTY

BUILDING CHARACTERISTICS

ELEMENT	CD	CONSTRUCTION
Exterior Wall	31	HARDIE BRD 100
Roof Structur	08	IRREGULAR 100
Roof Cover	03	COMP SHNGL 100
Interior Wall	05	DRYWALL 100
Interior Floo	13	LVT/LAMNT 70
Interior Floo	14	CARPET 30
Air Condition	03	CENTRAL 100
Heating Type	04	AIR DUCTED 100
Bedrooms		3 100
Bathrooms		2.5 100
Frame	02	WOOD FRAME 100
Stories	1.	1. 100
Units		0 100
Occupancy	00	NONE 100
Quality	03	Quality Level 03
DOR CODE	0100	SINGLE FAMILY
MAP NUM		MKT AREA 04
NEIGHBORHOOD/LOC	4077.00	

AREA TYPE	TOTAL GROSS AREA	PCT OF BASE	TOT ADJ AREA	SUBAREA MARKET VALUE
BAS	2,577	100	2,577	327,176
FGR	1,339	55	736	93,443
FOP	35	30	10	1,270
FSP	229	40	92	11,680
TOTALS	4,180		3,415	433,568

MARKET ADJUSTMENTS

TYPE	MDL	EFF. AREA	TOT ADJ PTS	EFF. BASE RATE	REPL. COST NEW	AYB	EYB	ECON	FNCT		NORM	% COND
0900	01	3,415	101.5680	126.96	433,568	2022	2022	0	0	0	0.00	100.00

1 SNGL FAM – 0% - 2023 Heated Area: 2577 HX Base Yr

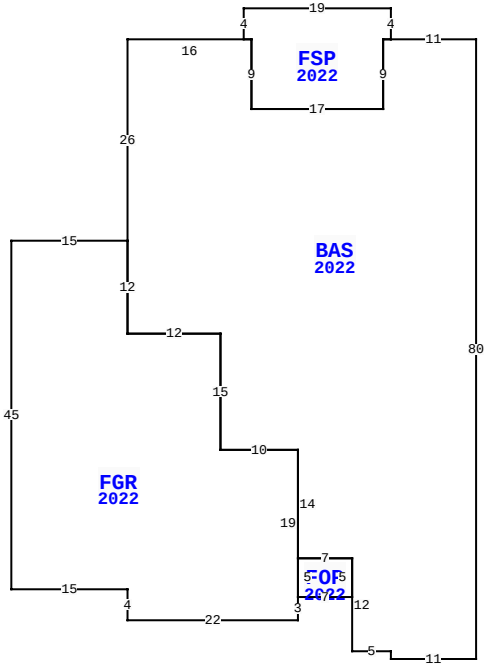

BLD DATE		LGL DATE	
XF DATE		LAND DATE	06/13/2023 MLU
INC DATE		AG DATE	

85475 FALL RIVER PKWY, FERNANDINA BEACH

VALUATION SUMMARY

VALUATION BY	STANDARD
Tax Group: 4	Tax Dist:
BUILDING MARKET VALUE	433,568
TOTAL MARKET OB/XF VALUE	26,266
TOTAL LAND VALUE - MARKET	75,000
TOTAL MARKET VALUE	534,834
SOH/AGL Deduction	0
ASSESSED VALUE	534,834
TOTAL EXEMPTION VALUE	0
BASE TAXABLE VALUE	534,834
TOTAL JUST VALUE	534,834
NCON VALUE	0
INCOME VALUE	
PREVIOUS YEAR MKT VALUE	513,405

PERMIT NUM	DESCRIPTION	AMT	ISSUED
22002926	CO ISSUED	0	02/23/2022
21006806	NEW CONSTR	410,586	05/04/2021

SALES DATA

OFF RECORD Number	DATE	TYPE INST	Q / U	V / I	RSN CD	SALE PRICE
2543/1226	2/24/2022	SW	Q	I	02	461,800
GRANTOR: RICHMOND AMERICAN HOM						
GRANTEE: JECKERT JAMES & BAR						
2373/0856	7/02/2020	SW	Q	V	05	3,194,300
GRANTOR: AW VENTURE II LLC						
GRANTEE: RICHMOND AMERICAN H						

BUILDING NOTES

BUILDING DIMENSIONS

BAS=[YR=2022] W11 FSP=[YR=2022] N4 W19 S4 E1 S9 E17 N9 E1$ W1 S9 W17 N9 W16 S26 FGR=[YR=2022] W15 S45 E15 S4 E22 N3 FOP=[YR=2022] E7 N5 W7 S5$ N19 W10 N15 W12 N12$ S12 E12 S15 E10 S14 E7 S12 E5 S1 E11 N80$.

EXTRA FEATURES

LN	OB/XF CODE	DESCRIPTION	BLD	CAP	L	W	UNITS	UT	Adj R	ADJ UNIT PRICE	ORIG COND	YEAR ON	YEAR ACTUAL	Q	% COND	OB/XF MKT VALUE	NOTES
1	0810	CONCRETE A	0	0	0	0	2,068.00	SF	6.50	6.50	100	2022	2022	3	100	13,442	
2	0462	ST/AL FNC	0	0	0	0	1,248.00	SF	10.00	10.00	100	2022	2022	3	98	12,230	
3	0463	FENCE GATE	0	0	0	0	2.00	UT	300.00	300.00	100	2022	2022	3	99	594	

LAND DESCRIPTION

TOTAL OB/XF 26,266

LN	USE CODE	CLS	LAND USE DESCRIPTION	CAP	RD	LOC ZONE	FRONT	DEPTH	TOT LND UTS	UNIT TYPE	DT	DPTH FACT	% COND	TOT ADJ	UNIT PRICE	ADJ UNIT PRICE	LAND VALUE	OTHER ADJUSTMENTS AND NOTES	YEAR	DENSITY	DECL	FRZ	YR	CONSRV
1	000134	C	SFR POND	0		PUD	0.00	0.00	1.00	LT		1.00	1.00	1.00	75,000.00	75,000.00	75,000							

REVIEW DATE 02/16/2022 BY NW Total Acres: 0.00 Total Land Value: 75,000 Market: 0 Agricultural: 0 Common: 75,000 PRINTED 08/06/2024 BY SYS