LOT 92
HAMPTON LAKES PHASE IV-A
OR 2343/796

MILLER LLOYD & FRANCES J
85425 FALL RIVER PARKWAY
FERNANDINA BEACH, FL 32034

2024

13-2N-27-0723-0092-0000

NASSAU COUNTY PROPERTY

BUILDING CHARACTERISTICS

ELEMENT	CD	CONSTRUCTION
Exterior Wall	31	HARDIE BRD 100
Roof Structur	08	IRREGULAR 100
Roof Cover	03	COMP SHNGL 100
Interior Wall	05	DRYWALL 100
Interior Floo	13	LVT/LAMNT 70
Interior Floo	14	CARPET 30
Air Condition	03	CENTRAL 100
Heating Type	04	AIR DUCTED 100
Bedrooms		3 100
Bathrooms		2.5 100
Frame	02	WOOD FRAME 100
Stories	1.	1. 100
Units		0 100
Occupancy	00	NONE 100
Quality	03	Quality Level 03
DOR CODE	0100	SINGLE FAMILY
MAP NUM		MKT AREA 04
NEIGHBORHOOD/LOC	4077.00	

AREA TYPE	TOTAL GROSS AREA	PCT OF BASE	TOT ADJ AREA	SUBAREA MARKET VALUE
BAS	2,568	100	2,568	326,033
FGR	1,339	55	736	93,443
FOP	35	30	10	1,270
FSP	242	40	97	12,315
TOTALS	4,184		3,411	433,061

MARKET ADJUSTMENTS

TYPE	MDL	EFF. AREA	TOT ADJ PTS	EFF. BASE RATE	REPL. COST NEW	AYB	EYB	ECON	FNCT		NORM	% COND
0900	01	3,411	101.5680	126.96	433,061	2022	2022	0	0	0	0.00	100.00

1 SNGL FAM – 100% - 2023 Heated Area: 2568 HX Base Yr

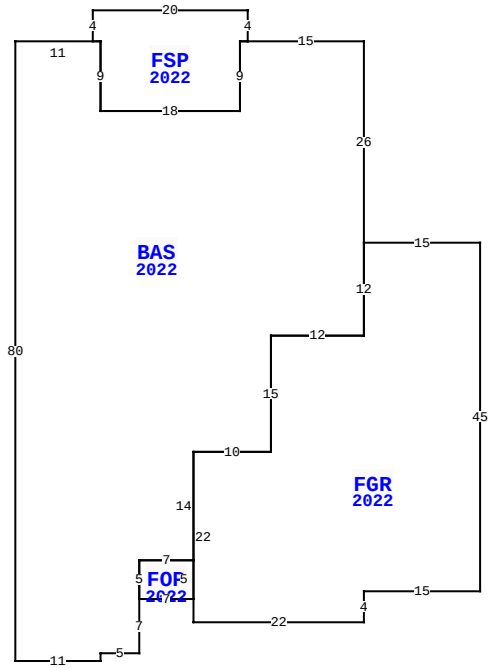

BLD DATE	
XF DATE	
INC DATE	
LGL DATE	
LAND DATE	06/13/2023 MLU
AG DATE	

85425 FALL RIVER PKWY, FERNANDINA BEACH

VALUATION SUMMARY

VALUATION BY		STANDARD
Tax Group: 4	Tax Dist:	
BUILDING MARKET VALUE		433,061
TOTAL MARKET OB/XF VALUE		23,246
TOTAL LAND VALUE - MARKET		75,000
TOTAL MARKET VALUE		531,307
SOH/AGL Deduction		6,181
ASSESSED VALUE		525,126
TOTAL EXEMPTION VALUE	13	525,126
BASE TAXABLE VALUE		0
TOTAL JUST VALUE		531,307
NCON VALUE		0
INCOME VALUE		
PREVIOUS YEAR MKT VALUE		509,831

PERMIT NUM	DESCRIPTION	AMT	ISSUED
22005179	CO ISSUED	0	04/05/2022
21005516	NEW CONSTR	344,728	04/30/2021

SALES DATA

OFF RECORD Number	DATE	TYPE INST	Q / U	V / I	RSN CD	SALE PRICE
2554/1216	4/05/2022	SW	Q	I	01	429,700
GRANTOR: RICHMOND AMERICAN HOM						
GRANTEE: MILLER LLOYD & FRAN						
2373/0856	7/02/2020	SW	Q	V	05	3,194,300
GRANTOR: AW VENTURE II LLC						
GRANTEE: RICHMOND AMERICAN H						

BUILDING NOTES

BUILDING DIMENSIONS

FGR=[YR=2022] W15 BAS=[YR=2022] N26 W15 FSP=[YR=2022] N4 W20 S4 E1 S9 E18 N9 E1$ W1 S9 W18 N9 W11 S80 E11 N1 E5 N7 FOP=[YR=2022] E7 N5 W7 S5$ N5 E7 N14 E10 N15 E12 N12$ S12 W12 S15 W10 S22 E22 N4 E15 N45 $.

EXTRA FEATURES

LN	OB/XF CODE	DESCRIPTION	BLD	CAP	L	W	UNITS	UT	Adj R	ADJ UNIT PRICE	ORIG COND	YEAR ON	YEAR ACTUAL	Q	% COND	OB/XF MKT VALUE	NOTES
1	0855	CONC PAVER	0	100	0	0	1,395.00	SF	10.00	10.00	100	2022	2022	3	100	13,950	
2	0462	ST/AL FNC	0	100	0	0	888.00	SF	10.00	10.00	100	2022	2022	3	98	8,702	
3	0463	FENCE GATE	0	100	0	0	2.00	UT	300.00	300.00	100	2022	2022	3	99	594	

LAND DESCRIPTION

TOTAL OB/XF 23,246

LN	USE CODE	CLS	LAND USE DESCRIPTION	CAP	RD	LOC ZONE	FRONT	DEPTH	TOT LND UTS	UNIT TYPE	DT	DPTH FACT	% COND	TOT ADJ	UNIT PRICE	ADJ UNIT PRICE	LAND VALUE	OTHER ADJUSTMENTS AND NOTES	YEAR	DENSITY	DECL	FRZ	YR	CONSRV
1	000134	C	SFR POND	100		PUD	0.00	0.00	1.00	LT		1.00	1.00	1.00	75,000.00	75,000.00	75,000							

REVIEW DATE 06/28/2022 BY NW Total Acres: 0.00 Total Land Value: 75,000 Market: 0 Agricultural: 0 Common: 75,000 PRINTED 08/06/2024 BY SYS