LOT 86
HAMPTON LAKES PHASE IV-A
OR 2343/796

BROWN ALAN H & JOHNNY P
85377 FALL RIVER PKWY
FERNANDINA BEACH, FL 32034

2024

13-2N-27-0723-0086-0000

NASSAU COUNTY PROPERTY

BUILDING CHARACTERISTICS

ELEMENT	CD	CONSTRUCTION
Exterior Wall	31	HARDIE BRD 100
Roof Structur	08	IRREGULAR 100
Roof Cover	03	COMP SHNGL 100
Interior Wall	05	DRYWALL 100
Interior Floo	11	CLAY TILE 60
Interior Floo	14	CARPET 40
Air Condition	03	CENTRAL 100
Heating Type	04	AIR DUCTED 100
Bedrooms		4 100
Bathrooms		3.5 100
Frame	02	WOOD FRAME 100
Stories	1.	1. 100
Units		0 100
Occupancy	00	NONE 100
Quality	03	Quality Level 03
DOR CODE	0100	SINGLE FAMILY
MAP NUM		MKT AREA 04
NEIGHBORHOOD/LOC	4077.00	

AREA TYPE	TOTAL GROSS AREA	PCT OF BASE	TOT ADJ AREA	SUBAREA MARKET VALUE
BAS	2,842	100	2,842	384,391
FGR	673	55	370	50,044
FOP	39	30	12	1,623
FSP	200	40	80	10,821
PTO	360	5	18	2,434
TOTALS	4,114		3,322	449,313

MARKET ADJUSTMENTS

TYPE	MDL	EFF. AREA	TOT ADJ PTS	EFF. BASE RATE	REPL. COST NEW	AYB	EYB	ECON	FNCT		NORM	% COND
0900	01	3,322	109.2960	136.62	453,852	2020	2020	0	0	0	1.00	99.00

1 SNGL FAM – 100% - 2021 Heated Area: 2842 HX Base Yr 2021

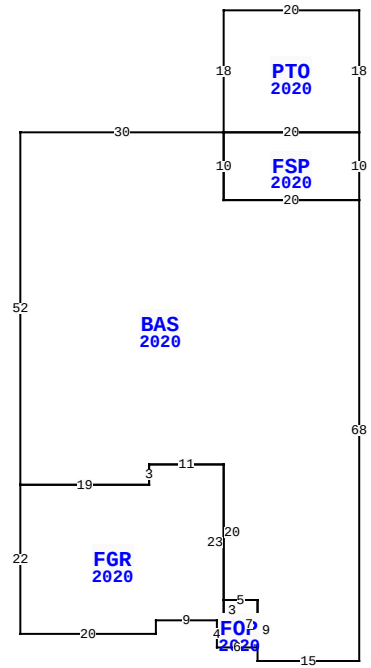

85377 FALL RIVER PKWY, FERNANDINA BEACH

BLD DATE		LGL DATE	
XF DATE		LAND DATE	06/13/2023 MLU
INC DATE		AG DATE	

VALUATION SUMMARY

VALUATION BY		STANDARD
Tax Group: 4	Tax Dist:	
BUILDING MARKET VALUE		449,313
TOTAL MARKET OB/XF VALUE		26,523
TOTAL LAND VALUE - MARKET		75,000
TOTAL MARKET VALUE		550,836
SOH/AGL Deduction		140,549
ASSESSED VALUE		410,287
TOTAL EXEMPTION VALUE	HX HB	50,000
BASE TAXABLE VALUE		360,287
TOTAL JUST VALUE		550,836
NCON VALUE		0
INCOME VALUE		
PREVIOUS YEAR MKT VALUE		531,024

PERMIT NUM	DESCRIPTION	AMT	ISSUED
21002339	SCRN ENCL	11,600	03/01/2021
20004215	NEW CONSTR	387,939	07/15/2020

SALES DATA

OFF RECORD Number	DATE	TYPE INST	Q U	V I	RSN CD	SALE PRICE
2414/0745	11/30/2020	SW	Q	I	02	435,800
GRANTOR: RICHMOND AMERICAN HOM						
GRANTEE: BROWN ALAN H & JOHN						
2373/0856	7/02/2020	SW	Q	V	05	3,194,300
GRANTOR: AW VENTURE II LLC						
GRANTEE: RICHMOND AMERICAN H						

BUILDING NOTES

BUILDING DIMENSIONS

BAS=[YR=2020] W30 S52 FGR=[YR=2020] S22 E20 N2 E9
FOP=[YR=2020] S4 E6 N7 W5 S3 W1$ E1 N23 W11 S3 W19$ E19 N3
E11 S20 E5 S9 E15 N68 FSP=[YR=2020] N10 PTO=[YR=2020] N18 W20
S18 E20$ W20 S10 E20$ W20 N10$.

EXTRA FEATURES

LN	OB/XF CODE	DESCRIPTION	BLD	CAP	L	W	UNITS	UT	Adj R	ADJ UNIT PRICE	ORIG COND	YEAR ON	YEAR ACTUAL	Q	% COND	OB/XF MKT VALUE	NOTES
1	0855	CONC PAVER	0	100	0	0	1,092.00	SF	10.00	10.00	100	2020	2020	3	99	10,811	
2	0462	ST/AL FNC	0	100	0	0	840.00	SF	10.00	10.00	100	2020	2020	3	93	7,812	
3	0463	FENCE GATE	0	100	0	0	2.00	UT	300.00	300.00	100	2020	2020	3	96	576	
4	0911	SCRN RM A	0	100	18	20	360.00	SF	21.88	21.88	100	2021	2021	3	93	7,324	

LAND DESCRIPTION

TOTAL OB/XF 26,523

LN	USE CODE	CLS	LAND USE DESCRIPTION	CAP	RD	LOC ZONE	FRONT	DEPTH	TOT LND UTS	UNIT TYPE	DT	DPTH FACT	% COND	TOT ADJ	UNIT PRICE	ADJ UNIT PRICE	LAND VALUE	OTHER ADJUSTMENTS AND NOTES	YEAR	DENSITY	DECL	FRZ	YR	CONSRV
1	000134	C	SFR POND	100		PUD	0.00	0.00	1.00	LT		1.00	1.00	1.00	75,000.00	75,000.00	75,000							

REVIEW DATE 10/20/2021 BY NW Total Acres: 0.00 Total Land Value: 75,000 Market: 0 Agricultural: 0 Common: 75,000 PRINTED 08/06/2024 BY SYS