LOT 76
HAMPTON LAKES PHASE IV-B
OR 2320/460

LYTTLE THEODORE R III & TAMMY D L/E/
85345 FALL RIVER PARKWAY
FERNANDINA BEACH, FL 32034

2024

13-2N-27-0723-0076-0000

BUILDING CHARACTERISTICS

ELEMENT	CD	CONSTRUCTION
Exterior Wall	31	HARDIE BRD 100
Roof Structur	08	IRREGULAR 100
Roof Cover	03	COMP SHNGL 100
Interior Wall	05	DRYWALL 100
Interior Floo	13	LVT/LAMNT 70
Interior Floo	14	CARPET 30
Air Condition	03	CENTRAL 100
Heating Type	04	AIR DUCTED 100
Bedrooms		3 100
Bathrooms		2.5 100
Frame	02	WOOD FRAME 100
Stories	1.	1. 100
Units		0 100
Occupancy	00	NONE 100
Quality	03	Quality Level 03
DOR CODE	0100	SINGLE FAMILY
MAP NUM		MKT AREA 04
NEIGHBORHOOD/LOC	4077.00	

AREA TYPE	TOTAL GROSS AREA	PCT OF BASE	TOT ADJ AREA	SUBAREA MARKET VALUE
BAS	2,568	100	2,568	322,773
FGR	1,339	55	736	92,509
FOP	35	30	10	1,257
FSP	242	40	97	12,192
TOTALS	4,184		3,411	428,730

MARKET ADJUSTMENTS

TYPE	MDL	EFF. AREA	TOT ADJ PTS	EFF. BASE RATE	REPL. COST NEW	AYB	EYB	ECON	FNCT		NORM	% COND
0900	01	3,411	101.5680	126.96	433,061	2020	2020	0	0	0	1.00	99.00

1 SNGL FAM – 100% - 2021 Heated Area: 2568 HX Base Yr 2021

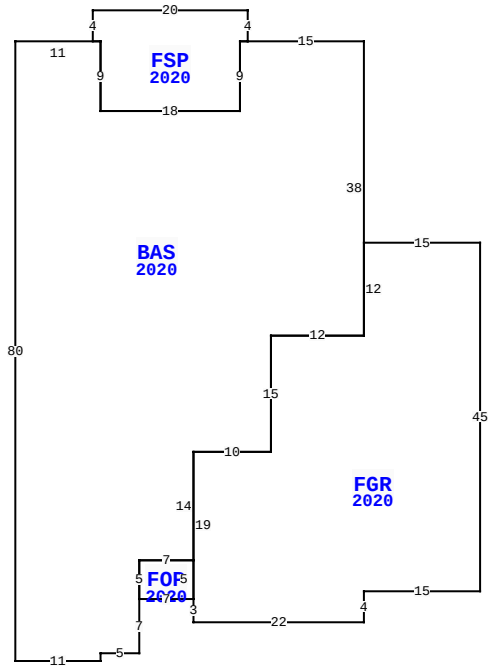

85345 FALL RIVER PKWY, FERNANDINA BEACH

BLD DATE		LGL DATE	
XF DATE		LAND DATE	06/13/2023 MLU
INC DATE		AG DATE	

NASSAU COUNTY PROPERTY

PAGE 1 of 1 4

VALUATION SUMMARY

VALUATION BY		STANDARD
Tax Group: 4	Tax Dist:	
BUILDING MARKET VALUE		428,730
TOTAL MARKET OB/XF VALUE		5,049
TOTAL LAND VALUE - MARKET		75,000
TOTAL MARKET VALUE		508,779
SOH/AGL Deduction		133,660
ASSESSED VALUE		375,119
TOTAL EXEMPTION VALUE	HX HB	50,000
BASE TAXABLE VALUE		325,119
TOTAL JUST VALUE		508,779
NCON VALUE		0
INCOME VALUE		
PREVIOUS YEAR MKT VALUE		489,393

PERMIT NUM	DESCRIPTION	AMT	ISSUED
20011426	CO ISSUED	0	11/19/2020
20005125	NEW CONSTR	387,190	07/31/2020

SALES DATA

OFF RECORD Number	DATE	TYPE INST	Q / U	V / I	RSN CD	SALE PRICE
2644/1108	5/23/2023	QC	U	I	11	100
GRANTOR: LYTTLE THEODORE R III						
GRANTEE: BRADLEY CHRISTINA M						
2413/1719	11/20/2020	SW	Q	I	01	396,400
GRANTOR: RICHMOND AMERICAN HOM						
GRANTEE: LYTTLE THEODORE R &						

BUILDING NOTES

BUILDING DIMENSIONS

BAS=[YR=2020] W15 FSP=[YR=2020] N4 W20 S4 E1 S9 E18 N9 E1$ W1 S9 W18 N9 W11 S80 E11 N1 E5 N7 FOP=[YR=2020] E7 FGR=[YR=2020] S3 E22 N4 E15 N45 W15 S12 W12 S15 W10 S19$ N5 W7 S5$ N5 E7 N14 E10 N15 E12 N38$.

EXTRA FEATURES

LN	OB/XF CODE	DESCRIPTION	BLD	CAP	L	W	UNITS	UT	Adj R	ADJ UNIT PRICE	ORIG COND	YEAR ON	YEAR ACTUAL	Q	% COND	OB/XF MKT VALUE	NOTES
1	0812	CONCRETE C	0	100	0	0	1,275.00	SF	4.00	4.00	100	2020	2020	3	99	5,049	

LAND DESCRIPTION

TOTAL OB/XF 5,049

LN	USE CODE	CLS	LAND USE DESCRIPTION	CAP	RD	LOC ZONE	FRONT	DEPTH	TOT LND UTS	UNIT TYPE	DT	DPTH FACT	% COND	TOT ADJ	UNIT PRICE	ADJ UNIT PRICE	LAND VALUE	OTHER ADJUSTMENTS AND NOTES	YEAR	DENSITY	DECL	FRZ	YR	CONSRV
1	000134	C	SFR POND	100		PUD	0.00	0.00	1.00	LT		1.00	1.00	1.00	75,000.00	75,000.00	75,000							

REVIEW DATE 11/02/2020 BY NW Total Acres: 0.00 Total Land Value: 75,000 Market: 0 Agricultural: 0 Common: 75,000 PRINTED 08/06/2024 BY SYS