LOT 74
HAMPTON LAKES PHASE IV-A
OR 2343/796

NEARY BRYAN & KAYLA
85622 FALL RIVER PKWY
FERNANDINA BEACH, FL 32034

2024

13-2N-27-0723-0074-0000

NASSAU COUNTY PROPERTY

BUILDING CHARACTERISTICS

ELEMENT	CD	CONSTRUCTION
Exterior Wall	31	HARDIE BRD 100
Roof Structur	08	IRREGULAR 100
Roof Cover	03	COMP SHNGL 100
Interior Wall	05	DRYWALL 100
Interior Floo	11	CLAY TILE 70
Interior Floo	14	CARPET 30
Air Condition	03	CENTRAL 100
Heating Type	04	AIR DUCTED 100
Bedrooms		3 100
Bathrooms		2.5 100
Frame	02	WOOD FRAME 100
Stories	1.	1. 100
Units		0 100
Occupancy	00	NONE 100
Quality	03	Quality Level 03
DOR CODE	0100	SINGLE FAMILY
MAP NUM		MKT AREA 04
NEIGHBORHOOD/LOC	4077.00	

AREA TYPE	TOTAL GROSS AREA	PCT OF BASE	TOT ADJ AREA	SUBAREA MARKET VALUE
BAS	2,568	100	2,568	347,042
FGR	1,339	55	736	99,464
FOP	35	30	10	1,351
FSP	242	40	97	13,109
PTO	400	5	20	2,702
TOTALS	4,584		3,431	463,668

MARKET ADJUSTMENTS

TYPE	MDL	EFF. AREA	TOT ADJ PTS	EFF. BASE RATE	REPL. COST NEW	AYB	EYB	ECON	FNCT		NORM	% COND
0900	01	3,431	108.6520	135.82	465,998	2021	2021	0	0	0	0.50	99.50

1 SNGL FAM – 100% - 2022 Heated Area: 2568 HX Base Yr 2022

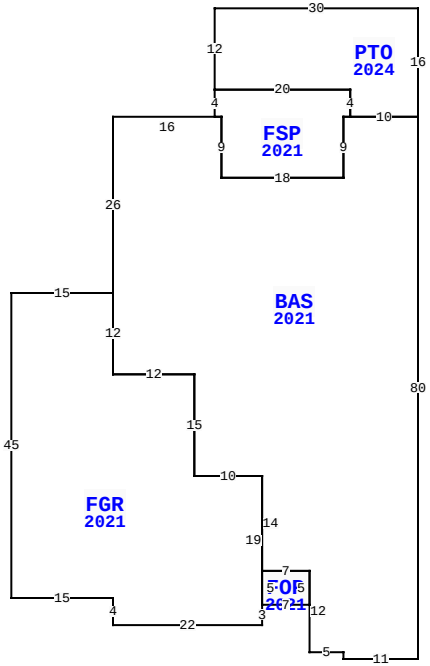

BLD DATE		LGL DATE	
XF DATE		LAND DATE	06/13/2023 MLU
INC DATE		AG DATE	

85622 FALL RIVER PKWY, FERNANDINA BEACH

VALUATION SUMMARY

VALUATION BY		STANDARD
Tax Group: 4	Tax Dist:	
BUILDING MARKET VALUE		463,668
TOTAL MARKET OB/XF VALUE		24,322
TOTAL LAND VALUE - MARKET		75,000
TOTAL MARKET VALUE		562,990
SOH/AGL Deduction		103,910
ASSESSED VALUE		459,080
TOTAL EXEMPTION VALUE	HX HB	50,000
BASE TAXABLE VALUE		409,080
TOTAL JUST VALUE		562,990
NCON VALUE		10,703
INCOME VALUE		
PREVIOUS YEAR MKT VALUE		529,996

PERMIT NUM	DESCRIPTION	AMT	ISSUED
230011859	12X12 SCRN ENCL	26,800	09/26/2023
21016387	CO ISSUED	0	11/23/2021
21006408	NEW CONSTR	412,534	05/19/2021

SALES DATA

OFF RECORD Number	DATE	TYPE INST	Q / U	V / I	RSN CD	SALE PRICE
2517/1778	11/24/2021	SW	Q	I	01	469,900
GRANTOR: RICHMOND AMERICAN HOM						
GRANTEE: NEARY BRYAN & KAYLA						
2373/0856	7/02/2020	SW	Q	V	05	3,194,300
GRANTOR: AW VENTURE II LLC						
GRANTEE: RICHMOND AMERICAN H						

BUILDING NOTES

BUILDING DIMENSIONS

BAS=[YR=2021;ORIG=0,0] W10 W1 S9 W18 N9 W16 S26 S12 E12 S15 E10 S14 E7 S12 E5 S1 E11 N80 $
FGR=[YR=2021;ORIG=-45,26] W15 S45 E15 S4 E22 N3 N19 W10 N15 W12 N12 $
FSP=[YR=2021;ORIG=-10,0] N4 W20 S4 E1 S9 E18 N9 E1 $
FOP=[YR=2021;ORIG=-23,72] E7 N5 W7 S5 $
PTO=[YR=2024;ORIG=-30,-4] E20 S4 E10 N16 W30 S12 $
.

EXTRA FEATURES

LN	OB/XF CODE	DESCRIPTION	BLD	CAP	L	W	UNITS	UT	Adj R	ADJ UNIT PRICE	ORIG COND	YEAR ON	YEAR ACTUAL	Q	% COND	OB/XF MKT VALUE	NOTES
1	0811	CONCRETE B	0	100	0	0	1,462.00	SF	5.20	5.20	100	2021	2021	3	99	7,526	
2	0462	ST/AL FNC	0	100	0	0	864.00	SF	10.00	10.00	100	2021	2021	3	95	8,208	
3	0463	FENCE GATE	0	100	0	0	2.00	UT	300.00	300.00	100	2021	2021	3	98	588	
4	0912	SCRN RM G	0	100	0	0	400.00	SF	20.00	20.00	100	2024	2023		100	8,000	

LAND DESCRIPTION

TOTAL OB/XF 24,322

LN	USE CODE	CLS	LAND USE DESCRIPTION	CAP	RD	LOC ZONE	FRONT	DEPTH	TOT LND UTS	UNIT TYPE	DT	DPTH FACT	% COND	TOT ADJ	UNIT PRICE	ADJ UNIT PRICE	LAND VALUE	OTHER ADJUSTMENTS AND NOTES	YEAR	DENSITY	DECL	FRZ	YR	CONSRV
1	000134	C	SFR POND	100		PUD	0.00	0.00	1.00	LT		1.00	1.00	1.00	75,000.00	75,000.00	75,000							

REVIEW DATE 12/12/2023 BY NW Total Acres: 0.00 Total Land Value: 75,000 Market: 0 Agricultural: 0 Common: 75,000 PRINTED 08/06/2024 BY SYS