LOT 53
HAMPTON LAKES PHASE IV-A
OR 2343/796

COWGAR STEVEN & SHEILA TRUST/COWGAR STEVEN L TRUST
85238 NORTHFIELD COURT
FERNANDINA BEACH, FL 32034

2024

13-2N-27-0723-0053-0000

NASSAU COUNTY PROPERTY

BUILDING CHARACTERISTICS

ELEMENT	CD	CONSTRUCTION
Exterior Wall	31	HARDIE BRD 100
Roof Structur	08	IRREGULAR 100
Roof Cover	03	COMP SHNGL 100
Interior Wall	05	DRYWALL 100
Interior Floo	13	LVT/LAMNT 100
Air Condition	03	CENTRAL 100
Heating Type	04	AIR DUCTED 100
Bedrooms		3 100
Bathrooms		2 100
Frame	02	WOOD FRAME 100
Stories	1.	1. 100
Units		0 100
Occupancy	00	NONE 100
Quality	03	Quality Level 03

DOR CODE 0100 SINGLE FAMILY
MAP NUM
MKT AREA 04
NEIGHBORHOOD/LOC 4077.00

AREA TYPE	TOTAL GROSS AREA	PCT OF BASE	TOT ADJ AREA	SUBAREA MARKET VALUE
BAS	2,241	100	2,241	298,501
FGR	826	55	454	60,473
FOP	37	30	11	1,465
FOP	240	30	72	9,590
TOTALS	3,344		2,778	370,030

MARKET ADJUSTMENTS

TYPE	MDL	EFF. AREA	TOT ADJ PTS	EFF. BASE RATE	REPL. COST NEW	AYB	EYB	ECON	FNCT		NORM	% COND
0900	01	2,778	106.5600	133.20	370,030	2022	2022	0	0	0	0.00	100.00

1 SNGL FAM – 100% - 2024 Heated Area: 2241 HX Base Yr 2024

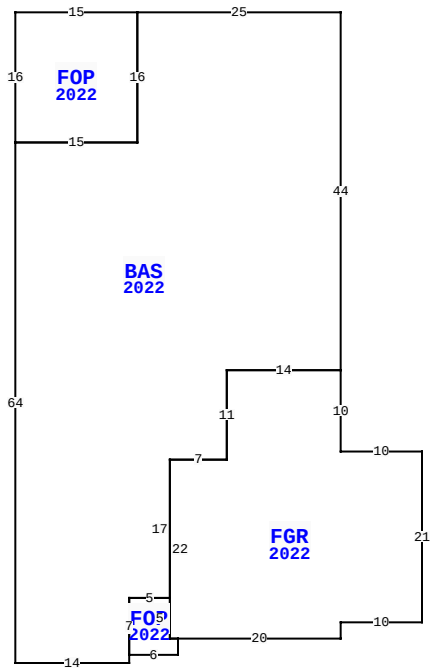

85238 NORTHFIELD CT, FERNANDINA BEACH

BLD DATE		LGL DATE	
XF DATE		LAND DATE	06/13/2023 MLU
INC DATE		AG DATE	

VALUATION SUMMARY

VALUATION BY		STANDARD
Tax Group: 4	Tax Dist:	
BUILDING MARKET VALUE		370,030
TOTAL MARKET OB/XF VALUE		11,810
TOTAL LAND VALUE - MARKET		75,000
TOTAL MARKET VALUE		456,840
SOH/AGL Deduction		151,991
ASSESSED VALUE		304,849
TOTAL EXEMPTION VALUE	HX HB	50,000
BASE TAXABLE VALUE		254,849
TOTAL JUST VALUE		456,840
NCON VALUE		0
INCOME VALUE		
PREVIOUS YEAR MKT VALUE		438,338

PERMIT NUM	DESCRIPTION	AMT	ISSUED
230003263	CO		03/13/2023
21007570	NEW CONSTR	339,889	09/01/2021

SALES DATA

OFF RECORD Number	DATE	TYPE INST	Q / U	V / I	RSN CD	SALE PRICE
2646/1958	5/31/2023	WD	U	I	11	100
GRANTOR: COWGAR STEVEN LEE & S						
GRANTEE: COWGAR STEVEN & SHE						
2636/1207	4/28/2023	WD	Q	I	01	525,000
GRANTOR: RICHMOND AMERICAN HOM						
GRANTEE: COWGAR STEVEN LEE &						

BUILDING NOTES

BUILDING DIMENSIONS

BAS=[YR=2022] W25 FOP=[YR=2022] W15 S16 E15 N16$ S16 W15 S64 E14 N1 FOP=[YR=2022] E6 N2 FGR=[YR=2022] E20 N2 E10 N21 W10 N10 W14 S11 W7 S22 E1$ W1 N5 W5 S7$ N7 E5 N17 E7 N11 E14 N44$.

EXTRA FEATURES

LN	OB/XF CODE	DESCRIPTION	BLD	CAP	L	W	UNITS	UT	Adj R	ADJ UNIT PRICE	ORIG COND	YEAR ON	YEAR ACTUAL	Q	% COND	OB/XF MKT VALUE	NOTES
1	0855	CONC PAVER	0	100	0	0	1,181.00	SF	10.00	10.00	100	2022	2022	3	100	11,810	

LAND DESCRIPTION

TOTAL OB/XF 11,810

LN	USE CODE	CLS	LAND USE DESCRIPTION	CAP	RD	LOC ZONE	FRONT	DEPTH	TOT LND UTS	UNIT TYPE	DT	DPTH FACT	% COND	TOT ADJ	UNIT PRICE	ADJ UNIT PRICE	LAND VALUE	OTHER ADJUSTMENTS AND NOTES	YEAR	DENSITY	DECL	FRZ	YR	CONSRV
1	000136	C	SFR INT	100		PUD	0.00	0.00	1.00	LT		1.00	1.00	1.00	75,000.00	75,000.00	75,000							

REVIEW DATE 02/15/2023 BY NW Total Acres: 0.00 Total Land Value: 75,000 Market: 0 Agricultural: 0 Common: 75,000 PRINTED 08/06/2024 BY SYS