LOT 86
IN OR 2234/501
HAMPTON LAKES #1 PB 7/252

GUTHRIE CLAYTON & DAVENNA
85057 CALUMET DR
FERNANDINA BEACH, FL 32034

2024

13-2N-27-0720-0086-0000

BUILDING CHARACTERISTICS

ELEMENT	CD	CONSTRUCTION
Exterior Wall	31	HARDIE BRD 100
Roof Structur	08	IRREGULAR 100
Roof Cover	03	COMP SHNGL 100
Interior Wall	05	DRYWALL 100
Interior Floo	14	CARPET 60
Interior Floo	11	CLAY TILE 40
Air Condition	03	CENTRAL 100
Heating Type	04	AIR DUCTED 100
Bedrooms		4 100
Bathrooms		4 100
Frame	02	WOOD FRAME 100
Stories	2.	2. 100
Units		0 100
Occupancy	00	NONE 100
Quality	03	Quality Level 03
DOR CODE	0100	SINGLE FAMILY
MAP NUM		MKT AREA 04
NEIGHBORHOOD/LOC	4077.00	

AREA TYPE	TOTAL GROSS AREA	PCT OF BASE	TOT ADJ AREA	SUBAREA MARKET VALUE
BAS	2,315	100	2,315	295,052
FGR	596	55	328	41,804
FOP	164	30	49	6,245
FOP	214	30	64	8,157
FUS	1,122	100	1,122	143,001
STR	96	10	10	1,274
TOTALS	4,507		3,888	495,533

MARKET ADJUSTMENTS

TYPE	MDL	EFF. AREA	TOT ADJ PTS	EFF. BASE RATE	REPL. COST NEW	AYB	EYB	ECON	FNCT		NORM	% COND
0900	01	3,888	104.5800	130.72	508,239	2017	2017	0	0	0	2.50	97.50

1 SNGL FAM – 100% - 2019 Heated Area: 3437 HX Base Yr 2019

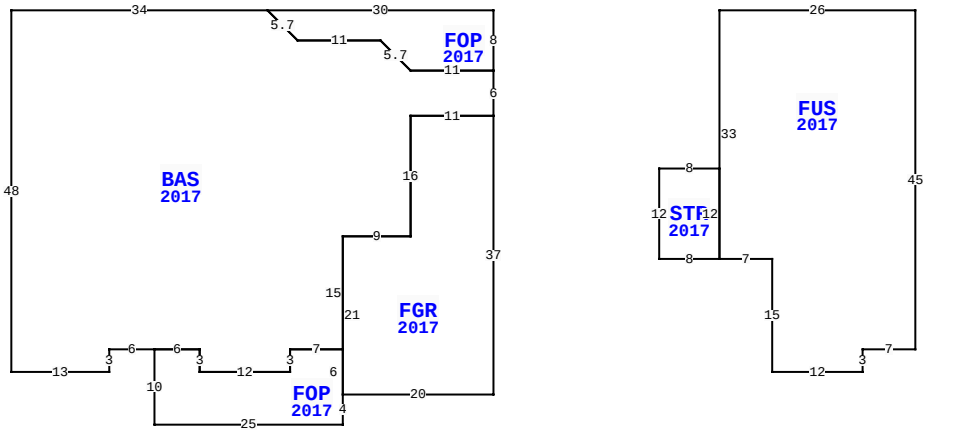

85057 CALUMET DR, FERNANDINA BEACH

BLD DATE		LGL DATE	
XF DATE		LAND DATE	06/13/2023 MLU
INC DATE		AG DATE	

NASSAU COUNTY PROPERTY

PAGE 1 of 1 4

VALUATION SUMMARY

VALUATION BY		STANDARD
Tax Group: 4	Tax Dist:	
BUILDING MARKET VALUE		495,533
TOTAL MARKET OB/XF VALUE		3,501
TOTAL LAND VALUE - MARKET		75,000
TOTAL MARKET VALUE		574,034
SOH/AGL Deduction		206,429
ASSESSED VALUE		367,605
TOTAL EXEMPTION VALUE	HX HB	50,000
BASE TAXABLE VALUE		317,605
TOTAL JUST VALUE		574,034
NCON VALUE		0
INCOME VALUE		
PREVIOUS YEAR MKT VALUE		551,695

PERMIT NUM	DESCRIPTION	AMT	ISSUED
18003288	CO ISSUED	0	04/02/2018
B1632983	NEW CONSTR	397,668	09/06/2016

SALES DATA

OFF RECORD Number	DATE	TYPE INST	Q / U	V / I	RSN CD	SALE PRICE
2234/0501	10/05/2018	SW	Q	I	01	366,800
GRANTOR: AVATAR PROPERTIES INC						
GRANTEE: GUTHRIE CLAYTON & D						
1974/0280	4/13/2015	SW	U	V	37	3,829,500
GRANTOR: AW VENTURE I LLC						
GRANTEE: AVATAR PROPERTIES I						

BUILDING NOTES

BUILDING DIMENSIONS

FOP=[YR=2017] W30 BAS=[YR=2017] W34 S48 E13 N3 E6
FOP=[YR=2017] S10 E25 N4 FGR=[YR=2017] E20 N37 W11 S16 W9
S21$ N6 W7 S3 W12 N3 W6$ E6 S3 E12 N3 E7 N15 E9 N16 E11 N6
W11 U4 L4 W11 U4 L4 $ D4 R4 E11 D4 R4 E11 N8$
PTR=[YR=2017] E30 FUS=[YR=2017] E26 S45 W7 S3 W12 N15 W7
STR=[YR=2017] W8 N12 E8 S12$ N33$ W30$.

EXTRA FEATURES

LN	OB/XF CODE	DESCRIPTION	BLD	CAP	L	W	UNITS	UT	Adj R	ADJ UNIT PRICE	ORIG COND	YEAR ON	YEAR ACTUAL	Q	% COND	OB/XF MKT VALUE	NOTES
1	0811	CONCRETE B	0	100	0	0	694.00	SF	5.20	5.20	100	2017	2017	3	97	3,501	

LAND DESCRIPTION

TOTAL OB/XF 3,501

LN	USE CODE	CLS	LAND USE DESCRIPTION	CAP	RD	LOC ZONE	FRONT	DEPTH	TOT LND UTS	UNIT TYPE	DT	DPTH FACT	% COND	TOT ADJ	UNIT PRICE	ADJ UNIT PRICE	LAND VALUE	OTHER ADJUSTMENTS AND NOTES	YEAR	DENSITY	DECL	FRZ	YR	CONSRV
1	000136	C	SFR INT	100		PUD	0.00	0.00	1.00	LT		1.00	1.00	1.00	75,000.00	75,000.00	75,000							

REVIEW DATE 02/12/2019 BY SB Total Acres: 0.00 Total Land Value: 75,000 Market: 0 Agricultural: 0 Common: 75,000 PRINTED 08/06/2024 BY SYS