LOT 70
HAMPTON LAKES #1 PB 7/252

**CROCKER PAUL/SUDOL BRENDA**
85108 CHAMPLAIN DR
FERNANDINA BEACH, FL 32034

**2024**

**13-2N-27-0720-0070-0000**

## BUILDING CHARACTERISTICS

| ELEMENT | CD | CONSTRUCTION |
|---|---|---|
| Exterior Wall | 16 | WD FR STUC 100 |
| Roof Structur | 08 | IRREGULAR 100 |
| Roof Cover | 03 | COMP SHNGL 100 |
| Interior Wall | 05 | DRYWALL 100 |
| Interior Floo | 12 | HARDWOOD 50 |
| Interior Floo | 14 | CARPET 50 |
| Air Condition | 03 | CENTRAL 100 |
| Heating Type | 04 | AIR DUCTED 100 |
| Bedrooms | | 3 100 |
| Bathrooms | | 2.5 100 |
| Frame | 02 | WOOD FRAME 100 |
| Stories | 2. | 2. 100 |
| Units | | 0 100 |
| Occupancy | 00 | NONE 100 |
| Quality | 03 | Quality Level 03 |
| DOR CODE | 0100 | SINGLE FAMILY |
| MAP NUM | | MKT AREA 04 |
| NEIGHBORHOOD/LOC | 4077.00 | |

| AREA TYPE | TOTAL GROSS AREA | PCT OF BASE | TOT ADJ AREA | SUBAREA MARKET VALUE |
|---|---|---|---|---|
| BAS | 1,780 | 100 | 1,780 | 219,103 |
| FGR | 420 | 55 | 231 | 28,434 |
| FOP | 136 | 30 | 41 | 5,047 |
| FOP | 190 | 30 | 57 | 7,017 |
| FUS | 900 | 100 | 900 | 110,782 |
| STR | 80 | 10 | 8 | 985 |
| UAT | 132 | 10 | 13 | 1,600 |
| TOTALS | 3,638 | | 3,030 | 372,967 |

## MARKET ADJUSTMENTS

| TYPE | MDL | EFF. AREA | TOT ADJ PTS | EFF. BASE RATE | REPL. COST NEW | AYB | EYB | ECON | FNCT | | NORM | % COND |
|---|---|---|---|---|---|---|---|---|---|---|---|---|
| 0900 | 01 | 3,030 | 102.5800 | 128.22 | 388,507 | 2015 | 2015 | 0 | 0 | 0 | 4.00 | 96.00 |

1 SNGL FAM – 100% - 2023 Heated Area: 2680 HX Base Yr 2023

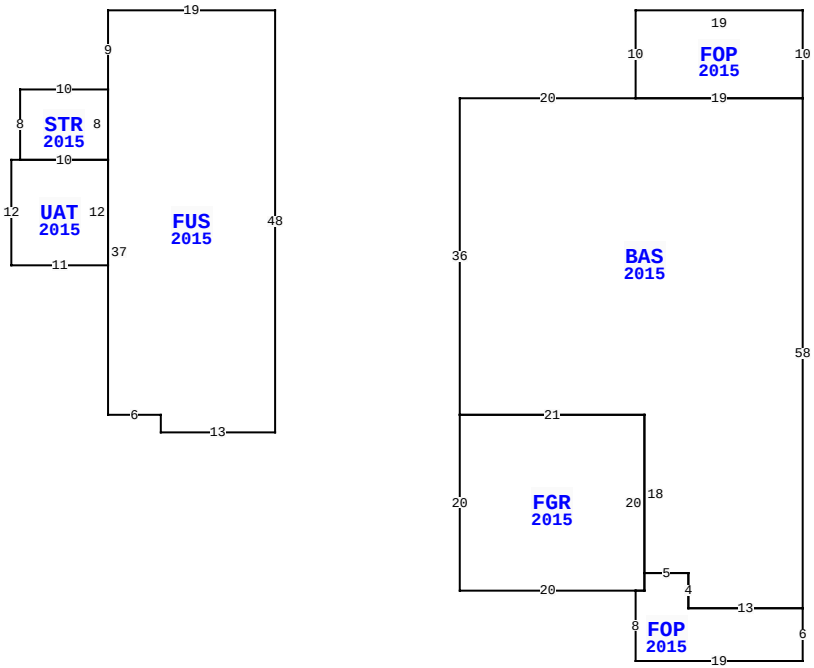


85108 CHAMPLAIN DR, FERNANDINA BEACH

| | | | |
|---|---|---|---|
| BLD DATE | | LGL DATE | |
| XF DATE | | LAND DATE | 06/13/2023 MLU |
| INC DATE | | AG DATE | |

## NASSAU COUNTY PROPERTY

PAGE 1 of 1 4

### VALUATION SUMMARY

| | | |
|---|---|---|
| VALUATION BY | | STANDARD |
| Tax Group: 4 | Tax Dist: | |
| BUILDING MARKET VALUE | | 372,967 |
| TOTAL MARKET OB/XF VALUE | | 9,696 |
| TOTAL LAND VALUE - MARKET | | 75,000 |
| TOTAL MARKET VALUE | | 457,663 |
| SOH/AGL Deduction | | 3,413 |
| ASSESSED VALUE | | 454,250 |
| TOTAL EXEMPTION VALUE | HX HB | 50,000 |
| BASE TAXABLE VALUE | | 404,250 |
| TOTAL JUST VALUE | | 457,663 |
| NCON VALUE | | 0 |
| INCOME VALUE | | |
| PREVIOUS YEAR MKT VALUE | | 441,019 |

| PERMIT NUM | DESCRIPTION | AMT | ISSUED |
|---|---|---|---|
| B1530700 | CO ISSUED | 0 | 12/30/2015 |
| B1530700 | NEW CONSTR | 324,682 | 06/01/2015 |

## SALES DATA

| OFF RECORD Number | DATE | TYPE INST | Q U | V I | RSN CD | SALE PRICE |
|---|---|---|---|---|---|---|
| 2498/1904 | 9/22/2021 | WD | Q | I | 02 | 480,000 |
| GRANTOR: COLLINS JOSHUA D & HA | | | | | | |
| GRANTEE: CROCKER PAUL & BREN | | | | | | |
| 2193/0661 | 4/27/2018 | WD | Q | I | 01 | 335,000 |
| GRANTOR: KOCHIS BRANDON & REBE | | | | | | |
| GRANTEE: COLLINS JOSHUA DANI | | | | | | |

## BUILDING NOTES

## BUILDING DIMENSIONS

FOP=[YR=2015] W19 S10 BAS=[YR=2015] W20 S36 FGR=[YR=2015] S20 E20 FOP=[YR=2015] S8 E19 N6 W13 N4 W5 S2 W1$ E1 N20 W21$ E21 S18 E5 S4 E13 N58 W19$ E19 N10$ PTR=W60 FUS=[YR=2015] W19 S9 STR=[YR=2015] W10 S8 UAT=[YR=2015] W1 S12 E11 N12 W10$ E10 N8$ S37 E6 S2 E13 N48$ E60 $.

## EXTRA FEATURES

| LN | OB/XF CODE | DESCRIPTION | BLD | CAP | L | W | UNITS | UT | Adj R | ADJ UNIT PRICE | ORIG COND | YEAR ON | YEAR ACTUAL | Q | % COND | OB/XF MKT VALUE | NOTES |
|---|---|---|---|---|---|---|---|---|---|---|---|---|---|---|---|---|---|
| 1 | 0811 | CONCRETE B | 0 | 100 | 0 | 0 | 820.00 | SF | 5.20 | 5.20 | 100 | 2015 | 2015 | 3 | 95 | 4,051 | |
| 2 | 0462 | ST/AL FNC | 0 | 100 | 0 | 0 | 576.00 | SF | 10.00 | 10.00 | 100 | 2022 | 2022 | 3 | 98 | 5,645 | |

## LAND DESCRIPTION

TOTAL OB/XF 9,696

| LN | USE CODE | CLS | LAND USE DESCRIPTION | CAP | RD | LOC ZONE | FRONT | DEPTH | TOT LND UTS | UNIT TYPE | DT | DPTH FACT | % COND | TOT ADJ | UNIT PRICE | ADJ UNIT PRICE | LAND VALUE | OTHER ADJUSTMENTS AND NOTES | YEAR | DENSITY | DECL | FRZ | YR | CONSRV |
|---|---|---|---|---|---|---|---|---|---|---|---|---|---|---|---|---|---|---|---|---|---|---|---|---|
| 1 | 000133 | C | SFR LAKE | 100 | | PUD | 0.00 | 0.00 | 1.00 | LT | | 1.00 | 1.00 | 1.00 | 75,000.00 | 75,000.00 | 75,000 | | | | | | | |

REVIEW DATE 01/06/2023 BY NWA Total Acres: 0.00 Total Land Value: 75,000 Market: 0 Agricultural: 0 Common: 75,000 PRINTED 08/06/2024 BY SYS