LOT 403
NORTH HAMPTON PHASE 3 PB 7/16

BAUM JEFFREY ALLEN & DAPHNE RENEE
96206 ABACO ISLAND DRIVE
FERNANDINA BEACH, FL 32034

2024

12-2N-27-1460-0403-0000

BUILDING CHARACTERISTICS

ELEMENT	CD	CONSTRUCTION
Exterior Wall	31	HARDIE BRD 100
Roof Structur	08	IRREGULAR 100
Roof Cover	03	COMP SHNGL 100
Interior Wall	05	DRYWALL 100
Interior Floo	13	LVT/LAMNT 100
Air Condition	03	CENTRAL 100
Heating Type	04	AIR DUCTED 100
Bedrooms		4 100
Bathrooms		3 100
Frame	02	WOOD FRAME 100
Stories	1.	1. 100
Units		1 100
Quality	04	Quality Level 04

DOR CODE 0100 SINGLE FAMILY
MAP NUM | MKT AREA 04
NEIGHBORHOOD/LOC 4043.00

AREA TYPE	TOTAL GROSS AREA	PCT OF BASE	TOT ADJ AREA	SUBAREA MARKET VALUE
BAS	2,951	100	2,951	390,417
FGR	777	55	427	56,492
FOP	190	30	57	7,541
FSP	456	40	182	24,079
FST	15	55	8	1,058
PTO	147	5	7	926
TOTALS	4,536		3,632	480,514

MARKET ADJUSTMENTS

TYPE	MDL	EFF. AREA	TOT ADJ PTS	EFF. BASE RATE	REPL. COST NEW	AYB	EYB	ECON	FNCT		NORM	% COND
0900	01	3,632	105.8400	132.30	480,514	2023	2023	0	0	0	0.00	100.00

1 SNGL FAM – 0% - 2024 Heated Area: 2951 HX Base Yr

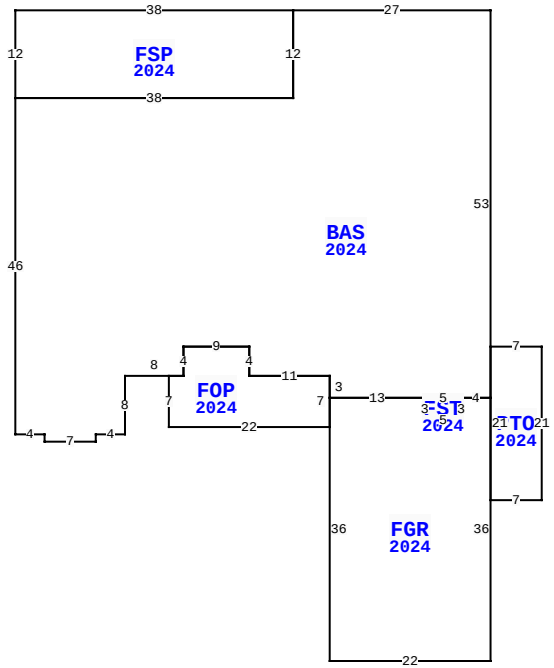

862201 NORTH HAMPTON CLUB WAY, FERNANDINA BEACH

BLD DATE		LGL DATE	
XF DATE		LAND DATE	
INC DATE		AG DATE	

NASSAU COUNTY PROPERTY

PAGE 1 of 1 4

VALUATION SUMMARY

VALUATION BY	STANDARD
Tax Group: 4	Tax Dist:
BUILDING MARKET VALUE	480,514
TOTAL MARKET OB/XF VALUE	86,355
TOTAL LAND VALUE - MARKET	127,500
TOTAL MARKET VALUE	694,369
SOH/AGL Deduction	0
ASSESSED VALUE	694,369
TOTAL EXEMPTION VALUE	0
BASE TAXABLE VALUE	694,369
TOTAL JUST VALUE	694,369
NCON VALUE	566,869
INCOME VALUE	
PREVIOUS YEAR MKT VALUE	127,500

PERMIT NUM	DESCRIPTION	AMT	ISSUED
220018724	CO		08/15/2023
230005987	1175SF SCRN ENCL	10,575	05/09/2023
22018724	NEW CONSTR	571,798	01/06/2023
22017898	SWIM POOL	88,718	12/06/2022

SALES DATA

OFF RECORD Number	DATE	TYPE INST	Q / U	V / I	RSN CD	SALE PRICE
2593/0807	9/28/2022	WD	Q	V	01	150,000
GRANTOR: MIRGOROD WALENTIN D &						
GRANTEE: BAUM JEFFREY ALLEN						
2437/0538	2/25/2021	WD	Q	V	02	90,000
GRANTOR: MCGUIRE RICHARD L						
GRANTEE: MIRGOROD WALENTIN D						

BUILDING NOTES

BUILDING DIMENSIONS

BAS=[YR=2024;ORIG=10,10] E38 N12 E27 S53 W4 W5 W13 N3 W11 N4 W9 S4 W8 S8 W4 S1 W7 N1 W4 N46 $
FSP=[YR=2024;ORIG=48,-2] W38 S12 E38 N12 $
FGR=[YR=2024;ORIG=53,87] E22 N36 W4 S3 W5 N3 W13 S36 $
FST=[YR=2024;ORIG=66,51] E5 S3 W5 N3 $
FOP=[YR=2024;ORIG=31,48] E2 N4 E9 S4 E11 S7 W22 N7 $
PTO=[YR=2024;ORIG=75,44] E7 S21 W7 N21 $
.

EXTRA FEATURES

LN	OB/XF CODE	DESCRIPTION	BLD	CAP	L	W	UNITS	UT	Adj R	ADJ UNIT PRICE	ORIG COND	YEAR ON	YEAR ACTUAL	Q	% COND	OB/XF MKT VALUE	NOTES
1	0855	CONC PAVER	0	0	0	0	1,394.00	SF	10.00	10.00	100	2024	2023		100	13,940	
2	0911	SCRN RM A	0	0	25	46	1,150.00	SF	17.50	17.50	100	2024	2023		100	20,125	
3	0861	POOL GUNIT	0	0	0	0	390.00	SF	85.00	85.00	100	2024	2023		100	33,150	
4	0855	CONC PAVER	0	0	0	0	760.00	SF	10.00	10.00	100	2024	2023		100	7,600	
5	0871	POOL HTR R	0	0	0	0	1.00	UT	2,000.00	2,000.00	100	2024	2023		100	2,000	
6	0462	ST/AL FNC	0	0	0	0	864.00	SF	10.00	10.00	100	2024	2023		100	8,640	
7	0463	FENCE GATE	0	0	0	0	3.00	UT	300.00	300.00	100	2024	2023		100	900	

LAND DESCRIPTION

TOTAL OB/XF 86,355

LN	USE CODE	CLS	LAND USE DESCRIPTION	CAP	RD	LOC ZONE	FRONT	DEPTH	TOT LND UTS	UNIT TYPE	DT	DPTH FACT	% COND	TOT ADJ	UNIT PRICE	ADJ UNIT PRICE	LAND VALUE	OTHER ADJUSTMENTS AND NOTES	YEAR	DENSITY	DECL	FRZ	YR	CONSRV
1	000135	C	SFR CNSVTN	0		PUD	0.00	0.00	1.00	LT		1.00	1.00	1.00	127,500.00	127,500.00	127,500							

REVIEW DATE 12/05/2023 BY NW Total Acres: 0.00 Total Land Value: 127,500 Market: 0 Agricultural: 0 Common: 127,500 PRINTED 08/06/2024 BY SYS