LOT 373
NORTH HAMPTON PHASE 3 PB 7/16

CHARETTE NATHAN & AMANDA B
85297 NAPEAGUE DR
FERNANDINA BEACH, FL 32034

2024

12-2N-27-1460-0373-0000

BUILDING CHARACTERISTICS

ELEMENT	CD	CONSTRUCTION
Exterior Wall	16	WD FR STUC 100
Roof Structur	08	IRREGULAR 100
Roof Cover	03	COMP SHNGL 100
Interior Wall	05	DRYWALL 100
Interior Floo	11	CLAY TILE 60
Interior Floo	14	CARPET 40
Air Condition	03	CENTRAL 100
Heating Type	04	AIR DUCTED 100
Bedrooms		4 100
Bathrooms		3.5 100
Frame	03	MASONRY 100
Stories	2.	2. 100
Units		0 100
Occupancy	00	NONE 100
Quality	04	Quality Level 04
DOR CODE	0100	SINGLE FAMILY
MAP NUM		MKT AREA 04
NEIGHBORHOOD/LOC	4043.00	

AREA TYPE	TOTAL GROSS AREA	PCT OF BASE	TOT ADJ AREA	SUBAREA MARKET VALUE
BAS	2,001	100	2,001	337,784
FGR	322	55	177	29,879
FGR	438	55	241	40,682
FOP	124	30	37	6,245
FSP	200	40	80	13,504
FUS	1,362	100	1,362	229,916
TOTALS	4,447		3,898	658,011

MARKET ADJUSTMENTS

TYPE	MDL	EFF. AREA	TOT ADJ PTS	EFF. BASE RATE	REPL. COST NEW	AYB	EYB	ECON	FNCT		NORM	% COND
0900	11	3,898	139.9464	174.93	681,877	2016	2016	0	0	0	3.50	96.50

1 SNGL FAM – 100% - 2021 Heated Area: 3363 HX Base Yr 2021

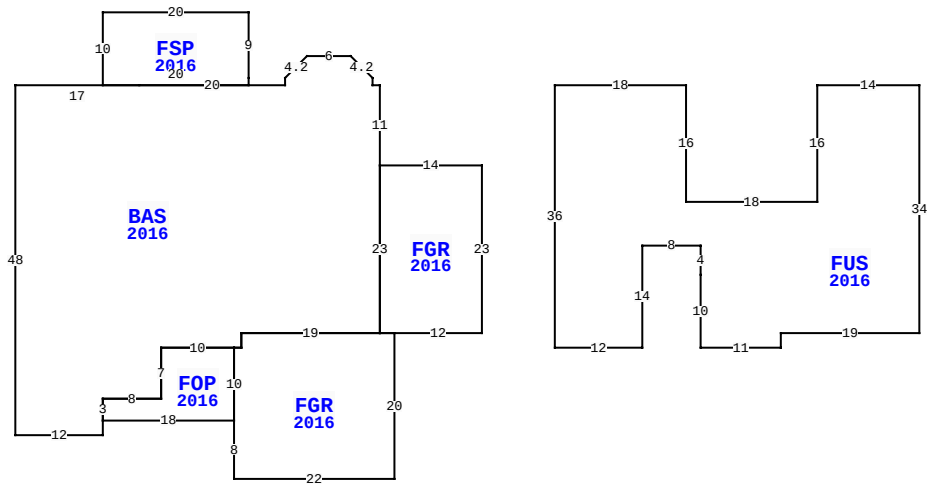

85297 NAPEAGUE DR, FERNANDINA BEACH

BLD DATE		LGL DATE	
XF DATE		LAND DATE	
INC DATE		AG DATE	

NASSAU COUNTY PROPERTY

PAGE 1 of 1 4

VALUATION SUMMARY

VALUATION BY		STANDARD
Tax Group: 4	Tax Dist:	
BUILDING MARKET VALUE		658,011
TOTAL MARKET OB/XF VALUE		25,600
TOTAL LAND VALUE - MARKET		159,375
TOTAL MARKET VALUE		842,986
SOH/AGL Deduction		473,192
ASSESSED VALUE		369,794
TOTAL EXEMPTION VALUE	HX HB	50,000
BASE TAXABLE VALUE		319,794
TOTAL JUST VALUE		842,986
NCON VALUE		0
INCOME VALUE		
PREVIOUS YEAR MKT VALUE		839,546

PERMIT NUM	DESCRIPTION	AMT	ISSUED
21004383	ADDITION	19,080	04/09/2021
B1631982	CO ISSUED	0	10/18/2016
B1631982	NEW CONSTR	416,663	03/01/2016

SALES DATA

OFF RECORD Number	DATE	TYPE INST	Q U	V I	RSN CD	SALE PRICE
2408/1809	11/12/2020	WD	Q	I	02	549,000
GRANTOR: LAND EDGAR LEE & ERIN						
GRANTEE: CHARETTE NATHAN & A						
1892/1780	12/04/2013	WD	Q	V	01	95,000
GRANTOR: DICKINSON GREGORY W						
GRANTEE: LAND EDGAR LEE & ER						

BUILDING NOTES

EXTRA FEATURES

LN	OB/XF CODE	DESCRIPTION	BLD	CAP	L	W	UNITS	UT	Adj R	ADJ UNIT PRICE	ORIG COND	YEAR ON	YEAR ACTUAL	Q	% COND	OB/XF MKT VALUE	NOTES
1	0811	CONCRETE B	0	100	0	0	1,109.00	SF	5.20	5.20	100	2016	2016	3	96	5,536	
2	0911	SCRN RM A	0	100	0	0	523.00	SF	21.88	21.88	100	2021	2021	3	93	10,640	
3	0857	SANDSTONE/	0	100	0	0	589.00	SF	16.00	16.00	100	2021	2021	3	100	9,424	

BUILDING DIMENSIONS

BAS=[YR=2016;ORIG=-10,1] N11 W1 N1 U3L3 W6 D3L3 S1 W20 W17 S48 E12 N2 N3 E8 N7 E10 E1 N2 E19 N23 $
FUS=[YR=2016;ORIG=14,-10] E18 S16 E18 N16 E14 S34 W19 S2 W11 N10 N4 W8 S14 W12 N36 $
FGR=[YR=2016;ORIG=-30,36] S8 E22 N20 W2 W19 S2 W1 S10 $
FGR=[YR=2016;ORIG=4,1] W14 S23 E2 E12 N23 $
FSP=[YR=2016;ORIG=-28,-11] N9 W20 S10 E20 N1 $
FOP=[YR=2016;ORIG=-48,36] E18 N10 W10 S7 W8 S3 $
PTR=[ORIG=0,0] E30 W30 $
.

LAND DESCRIPTION

TOTAL OB/XF 25,600

LN	USE CODE	CLS	LAND USE DESCRIPTION	CAP	RD	LOC ZONE	FRONT	DEPTH	TOT LND UTS	UNIT TYPE	DT	DPTH FACT	% COND	TOT ADJ	UNIT PRICE	ADJ UNIT PRICE	LAND VALUE	OTHER ADJUSTMENTS AND NOTES	YEAR	DENSITY	DECL	FRZ	YR	CONSRV
1	000141	C	SFR GOLF B	100		PUD	0.00	0.00	1.00	LT		1.00	1.00	1.25	127,500.00	159,375.00	159,375							

REVIEW DATE 08/05/2021 BY NW Total Acres: 0.00 Total Land Value: 159,375 Market: 0 Agricultural: 0 Common: 159,375 PRINTED 08/06/2024 BY SYS