LOT 297
NORTH HAMPTON PHASE 1 PB 6/215

HOUSER JOHN DAVID & DONNA LYNN
85246 SHINNECOCK DRIVE
FERNANDINA BEACH, FL 32034

2024

12-2N-27-1460-0297-0000

BUILDING CHARACTERISTICS

ELEMENT	CD	CONSTRUCTION
Exterior Wall	16	WD FR STUC 100
Roof Structur	08	IRREGULAR 100
Roof Cover	03	COMP SHNGL 100
Interior Wall	05	DRYWALL 100
Interior Floo	12	HARDWOOD 80
Interior Floo	11	CLAY TILE 20
Air Condition	03	CENTRAL 100
Heating Type	04	AIR DUCTED 100
Bedrooms		3 100
Bathrooms		2.5 100
Frame	02	WOOD FRAME 100
Stories	2.	2. 100
Units		0 100
Occupancy	00	NONE 100
Quality	04	Quality Level 04

DOR CODE 0100 SINGLE FAMILY
MAP NUM | MKT AREA 04
NEIGHBORHOOD/LOC 4043.00

AREA TYPE	TOTAL GROSS AREA	PCT OF BASE	TOT ADJ AREA	SUBAREA MARKET VALUE
BAL	112	15	17	2,343
BAS	1,575	100	1,575	217,047
FGR	518	55	285	39,275
FOP	36	30	11	1,516
FSP	84	40	34	4,685
FUS	596	100	596	82,133
TOTALS	2,921		2,518	346,999

MARKET ADJUSTMENTS

TYPE	MDL	EFF. AREA	TOT ADJ PTS	EFF. BASE RATE	REPL. COST NEW	AYB	EYB	ECON	FNCT		NORM	% COND
0900	01	2,518	118.5408	148.18	373,117	2004	2009	0	0	0	7.00	93.00

1 SNGL FAM – 100% - 2024 Heated Area: 2171 HX Base Yr 2024

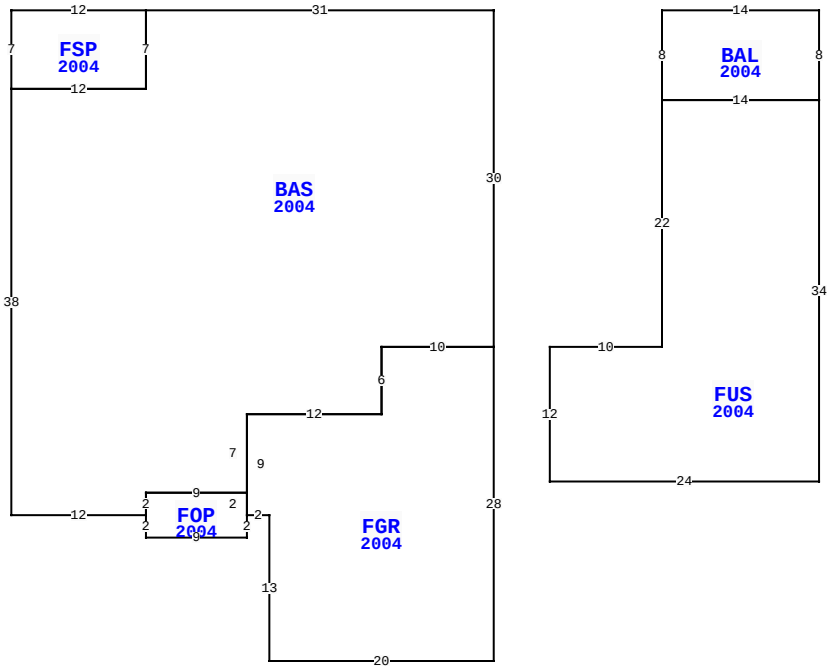

85246 SHINNECOCK HILLS DR, FERNANDINA BEACH

BLD DATE	03/29/2023 NW	LGL DATE	
XF DATE		LAND DATE	
INC DATE		AG DATE	

NASSAU COUNTY PROPERTY

PAGE 1 of 1 4

VALUATION SUMMARY

VALUATION BY		STANDARD
Tax Group: 4	Tax Dist:	
BUILDING MARKET VALUE		346,999
TOTAL MARKET OB/XF VALUE		6,194
TOTAL LAND VALUE - MARKET		127,500
TOTAL MARKET VALUE		480,693
SOH/AGL Deduction		0
ASSESSED VALUE		480,693
TOTAL EXEMPTION VALUE	HX HB	50,000
BASE TAXABLE VALUE		430,693
TOTAL JUST VALUE		480,693
NCON VALUE		0
INCOME VALUE		
PREVIOUS YEAR MKT VALUE		465,223

PERMIT NUM	DESCRIPTION	AMT	ISSUED
B240005124	BUILD 12 X 13' SC	9,000	04/29/2024
20008713	REPAIR/RRF	20,000	10/12/2020
19003871	REPAIR/RRF	0	05/08/2019

SALES DATA

OFF RECORD Number	DATE	TYPE INST	Q / U	V / I	RSN CD	SALE PRICE
2586/1158	8/12/2022	WD	Q	I	02	549,000
GRANTOR: PAULSEN BEVERLY E						
GRANTEE: HOUSER JOHN DAVID &						
1565/0050	5/06/2008	WD	Q	I		297,000
GRANTOR: FREEMAN DONALD D & CL						
GRANTEE: PAULSEN BEVERLY E						

BUILDING NOTES

BUILDING DIMENSIONS

BAS=[YR=2004] W31 FSP=[YR=2004] W12 S7 E12 N7$ S7 W12 S38 E12 FOP=[YR=2004] S2 E9 N2 FGR=[YR=2004] E2 S13 E20 N28 W10 S6 W12 S9 $N2 W9 S2$ N2 E9 N7E12N6 E10 N30$ PTR=E15 BAL=[YR=2004] E14 S8 FUS=[YR=2004] S34 W24 N12 E10 N22 E14$ W14 N8$ W15$.

EXTRA FEATURES

LN	OB/XF CODE	DESCRIPTION	BLD	CAP	L	W	UNITS	UT	Adj R	ADJ UNIT PRICE	ORIG COND	YEAR ON	YEAR ACTUAL	Q	% COND	OB/XF MKT VALUE	NOTES
1	0500	FP-PRE FAB	0	100	0	0	1.00	UT	3,500.00	3,500.00	100	2004	2004	3	88	3,080	
2	0811	CONCRETE B	0	100	0	0	713.00	SF	5.20	5.20	100	2004	2004	3	84	3,114	

LAND DESCRIPTION

TOTAL OB/XF 6,194

LN	USE CODE	CLS	LAND USE DESCRIPTION	CAP	RD	LOC ZONE	FRONT	DEPTH	TOT LND UTS	UNIT TYPE	DT	DPTH FACT	% COND	TOT ADJ	UNIT PRICE	ADJ UNIT PRICE	LAND VALUE	OTHER ADJUSTMENTS AND NOTES	YEAR	DENSITY	DECL	FRZ	YR	CONSRV
1	000134	C	SFR POND	100		PUD	0.00	0.00	1.00	LT		1.00	1.00	1.00	127,500.00	127,500.00	127,500							

REVIEW DATE 05/03/2021 BY NWX Total Acres: 0.00 Total Land Value: 127,500 Market: 0 Agricultural: 0 Common: 127,500 PRINTED 08/06/2024 BY SYS