LOT 279
IN OR 1699/1985 & OR 1699/1986
NORTH HAMPTON PHASE 1 PB 6/215

ALEXANDER ROBERT II & JENNIFER
85061 WAINSCOTT COURT
FERNANDINA BEACH, FL 32034

2024

12-2N-27-1460-0279-0000

NASSAU COUNTY PROPERTY

BUILDING CHARACTERISTICS

ELEMENT	CD	CONSTRUCTION
Exterior Wall	16	WD FR STUC 100
Roof Structur	08	IRREGULAR 100
Roof Cover	03	COMP SHNGL 100
Interior Wall	05	DRYWALL 100
Interior Floo	14	CARPET 60
Interior Floo	11	CLAY TILE 40
Air Condition	03	CENTRAL 100
Heating Type	04	AIR DUCTED 100
Bedrooms		4 100
Bathrooms		3.5 100
Frame	02	WOOD FRAME 100
Stories	2.	2. 100
Units		0 100
Occupancy	00	NONE 100
Quality	04	Quality Level 04
DOR CODE	0100	SINGLE FAMILY
MAP NUM		MKT AREA 04
NEIGHBORHOOD/LOC	4043.00	

AREA TYPE	TOTAL GROSS AREA	PCT OF BASE	TOT ADJ AREA	SUBAREA MARKET VALUE
BAS	1,704	100	1,704	218,891
FGR	503	55	277	35,582
FOP	136	30	41	5,267
FOP	136	30	41	5,267
FOP	266	30	80	10,276
FSP	120	40	48	6,166
FSP	160	40	64	8,222
FUS	676	100	676	86,837
USP	861	30	258	33,142
TOTALS	4,562		3,189	409,649

MARKET ADJUSTMENTS

TYPE	MDL	EFF. AREA	TOT ADJ PTS	EFF. BASE RATE	REPL. COST NEW	AYB	EYB	ECON	FNCT		NORM	% COND
0900	01	3,189	114.1812	142.73	455,166	2003	2003	0	0	0	10.00	90.00

1 SNGL FAM – 100% - 2012 Heated Area: 2380 HX Base Yr 2012

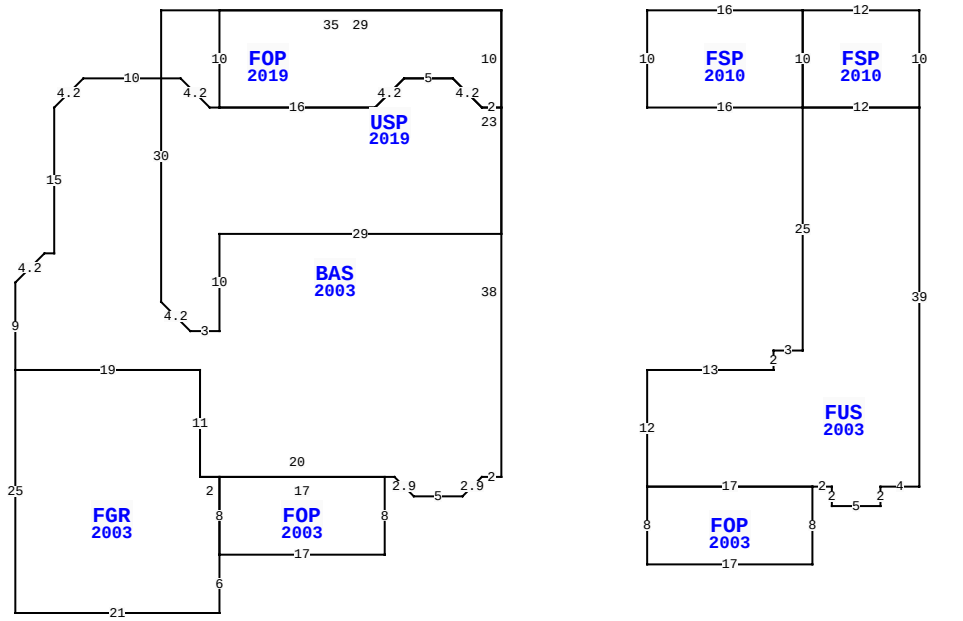

85061 WAINSCOTT CT, FERNANDINA BEACH

BLD DATE	03/29/2023 NW	LGL DATE	
XF DATE		LAND DATE	
INC DATE		AG DATE	

VALUATION SUMMARY

VALUATION BY		STANDARD
Tax Group: 4	Tax Dist:	
BUILDING MARKET VALUE		409,649
TOTAL MARKET OB/XF VALUE		56,554
TOTAL LAND VALUE - MARKET		105,000
TOTAL MARKET VALUE		571,203
SOH/AGL Deduction		178,184
ASSESSED VALUE		393,019
TOTAL EXEMPTION VALUE	HX HB	50,000
BASE TAXABLE VALUE		343,019
TOTAL JUST VALUE		571,203
NCON VALUE		0
INCOME VALUE		
PREVIOUS YEAR MKT VALUE		554,574

PERMIT NUM	DESCRIPTION	AMT	ISSUED
B1909534	SCRN ENCL	27,772	11/19/2019
B1909974	SWIM POOL	40,000	09/23/2019
B24041	REPAIR/RRF	4,700	10/01/2010
B0210177	NEW CONSTR	182,871	09/01/2002

SALES DATA

OFF RECORD Number	DATE	TYPE INST	Q / U	V / I	RSN CD	SALE PRICE
1699/1986	9/17/2010	WD	U	I	11	126,250
GRANTOR: MASSACHUSETTS AVE LLC						
GRANTEE: ALEXANDER ROBERT W						
1699/1985	9/17/2010	WD	U	I	11	126,250
GRANTOR: DARI HOMES LLC &						
GRANTEE: ALEXANDER ROBERT W						

BUILDING NOTES

BUILDING DIMENSIONS

USP=[YR=2019] W35 S30 R3 D3 E3 N10 E29 N23$ FOP=[YR=2019] W29 S10 BAS=[YR=2003] W1 U3 L3 W10 D3 L3 S15 W1 D3 L3 S9 FGR=[YR=2003] S25 E21 N6 FOP=[YR=2003] E17 N8 W17 S8 $ N8 W2N11 W19 $ E19 S11 E20 D2 R2 E5 U2 R2 E2 N38 W2 U3 L3 W5 D3 L3 W16 $ E16 U3 R3 E5 D3 R3 E2 N10 $ PTR= E15 FSP=[YR=2010] E16 FSP=[YR=2010] E12 S10 FUS=[YR=2003] S39 W4 S2 W5 N2 W2 FOP=[YR=2003] S8 W17 N8 E17 $ W17 N12 E13 N2 E3 N25 E12 $ W12 N10 $ S10 W16 N10 $ W15 $.

EXTRA FEATURES

LN	OB/XF CODE	DESCRIPTION	BLD	CAP	L	W	UNITS	UT	Adj R	ADJ UNIT PRICE	ORIG COND	YEAR ON	YEAR ACTUAL	Q	% COND	OB/XF MKT VALUE	NOTES
1	0500	FP-PRE FAB	0	100	0	0	1.00	UT	3,500.00	3,500.00	100	2003	2003	3	87	3,045	
2	0811	CONCRETE B	0	100	0	0	1,584.00	SF	5.20	5.20	100	2003	2003	3	83	6,837	
3	0871	POOL HTR R	0	100	0	0	1.00	UT	2,000.00	2,000.00	100	2019	2019	3	86	1,720	
4	0855	CONC PAVER	0	100	0	0	681.00	SF	10.00	10.00	100	2019	2019	3	98	6,674	
5	0861	POOL GUNIT	0	100	0	0	342.00	SF	85.00	85.00	100	2019	2019	3	90	26,163	
6	0911	SCRN RM A	0	100	23	35	805.00	SF	17.50	17.50	100	2019	2019	3	86	12,115	

LAND DESCRIPTION

TOTAL OB/XF 56,554

LN	USE CODE	CLS	LAND USE DESCRIPTION	CAP	RD	LOC ZONE	FRONT	DEPTH	TOT LND UTS	UNIT TYPE	DT	DPTH FACT	% COND	TOT ADJ	UNIT PRICE	ADJ UNIT PRICE	LAND VALUE	OTHER ADJUSTMENTS AND NOTES	YEAR	DENSITY	DECL	FRZ	YR	CONSRV
1	000141	C	SFR GOLF B	100		PUD	0.00	0.00	1.00	LT		1.00	1.00	1.00	105,000.00	105,000.00	105,000							

REVIEW DATE 12/10/2019 BY NWTW Total Acres: 0.00 Total Land Value: 105,000 Market: 0 Agricultural: 0 Common: 105,000 PRINTED 08/06/2024 BY SYS