LOT 274
IN OR 2238/436
NORTH HAMPTON PHASE 1 PB 6/215

PALSHA RICHARD & KATHY O L/E/
85001 WAINSCOTT CT
FERNANDINA BEACH, FL 32034

2024

12-2N-27-1460-0274-0000

BUILDING CHARACTERISTICS

ELEMENT	CD	CONSTRUCTION
Exterior Wall	16	WD FR STUC 100
Roof Structur	08	IRREGULAR 100
Roof Cover	03	COMP SHNGL 100
Interior Wall	05	DRYWALL 100
Interior Floo	11	CLAY TILE 80
Interior Floo	14	CARPET 20
Air Condition	03	CENTRAL 100
Heating Type	04	AIR DUCTED 100
Bedrooms		3 100
Bathrooms		3 100
Frame	02	WOOD FRAME 100
Stories	1.5	1.5 100
Units		0 100
Occupancy	00	NONE 100
Quality	04	Quality Level 04
DOR CODE	0100	SINGLE FAMILY
MAP NUM		MKT AREA 04
NEIGHBORHOOD/LOC	4043.00	

AREA TYPE	TOTAL GROSS AREA	PCT OF BASE	TOT ADJ AREA	SUBAREA MARKET VALUE
BAL	120	15	18	2,586
BAS	1,366	100	1,366	196,215
FGR	486	55	267	38,352
FOP	30	30	9	1,292
FSP	104	40	42	6,033
FUS	632	100	632	90,781
UOP	120	20	24	3,447
TOTALS	2,858		2,358	338,707

MARKET ADJUSTMENTS

TYPE	MDL	EFF. AREA	TOT ADJ PTS	EFF. BASE RATE	REPL. COST NEW	AYB	EYB	ECON	FNCT		NORM	% COND
0900	01	2,358	126.9786	158.72	374,262	2004	2004	0	0	0	9.50	90.50

1 SNGL FAM – 100% - 2014 Heated Area: 1998 HX Base Yr 2014

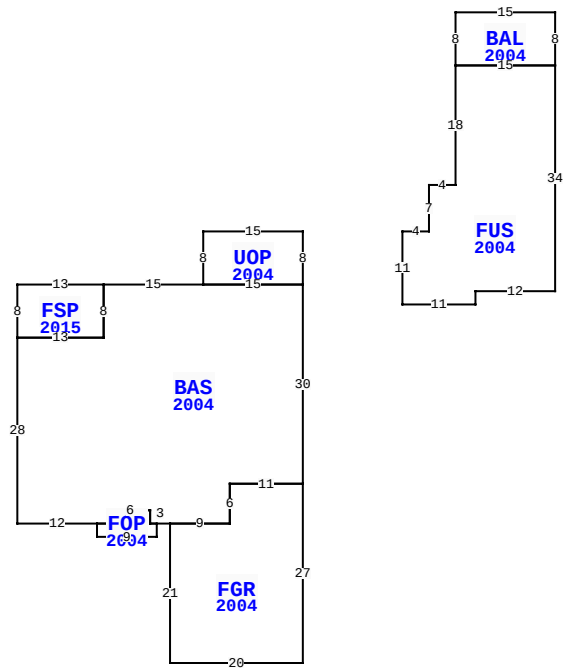

BLD DATE	03/29/2023	NW	LGL DATE
XF DATE			LAND DATE
INC DATE			AG DATE

85001 WAINSCOTT CT, FERNANDINA BEACH

NASSAU COUNTY PROPERTY

PAGE 1 of 1 4

VALUATION SUMMARY

VALUATION BY		STANDARD
Tax Group: 4	Tax Dist:	
BUILDING MARKET VALUE		338,707
TOTAL MARKET OB/XF VALUE		8,264
TOTAL LAND VALUE - MARKET		127,500
TOTAL MARKET VALUE		474,471
SOH/AGL Deduction		220,924
ASSESSED VALUE		253,547
TOTAL EXEMPTION VALUE	HX HB	50,000
BASE TAXABLE VALUE		203,547
TOTAL JUST VALUE		474,471
NCON VALUE		0
INCOME VALUE		
PREVIOUS YEAR MKT VALUE		459,462

PERMIT NUM	DESCRIPTION	AMT	ISSUED

SALES DATA

OFF RECORD Number	DATE	TYPE INST	Q / U	V / I	RSN CD	SALE PRICE
2238/0436	11/12/2018	LE	U	I	11	100
GRANTOR: PALSHA RICHARD & KATH						
GRANTEE: PALSHA RICHARD & KA						
1792/0694	5/02/2012	WD	Q	I	02	235,300
GRANTOR: RODGERS WILLIAM H & J						
GRANTEE: PALSHA RICHARD & KA						

BUILDING NOTES

BUILDING DIMENSIONS

UOP=[YR=2004] W15 S8 BAS=[YR=2004] W15 FSP=[YR=2015] W13 S8 E13 N8 $ S8 W13 S28 E12 FOP=[YR=2004] S2 E9 N2 W1 N2 W6 S2 W2$ E2 N2 E6 S2 E3 FGR=[YR=2004] S21 E20 N27 W11 S6 W9 $ E9 N6 E11 N30 W15 $ E15 N8 $ PTR= E15 FUS=[YR=2004] E4 N7 E4 N18 BAL=[YR=2004] N8 E15 S8 W15 $ E15 S34 W12 S2 W11 N11 $ W15 $.

EXTRA FEATURES

LN	OB/XF CODE	DESCRIPTION	BLD	CAP	L	W	UNITS	UT	Adj R	ADJ UNIT PRICE	ORIG COND	YEAR ON	YEAR ACTUAL	Q	% COND	OB/XF MKT VALUE	NOTES
1	0500	FP-PRE FAB	0	100	0	0	1.00	UT	3,500.00	3,500.00	100	2004	2004	3	88	3,080	
2	0811	CONCRETE B	0	100	0	0	814.00	SF	5.20	5.20	100	2004	2004	3	84	3,556	
3	0855	CONC PAVER	0	100	0	0	175.00	SF	10.00	10.00	100	2012	2012	3	93	1,628	

LAND DESCRIPTION

TOTAL OB/XF 8,264

LN	USE CODE	CLS	LAND USE DESCRIPTION	CAP	RD	LOC ZONE	FRONT	DEPTH	TOT LND UTS	UNIT TYPE	DT	DPTH FACT	% COND	TOT ADJ	UNIT PRICE	ADJ UNIT PRICE	LAND VALUE	OTHER ADJUSTMENTS AND NOTES	YEAR	DENSITY	DECL	FRZ	YR	CONSRV
1	000134	C	SFR POND	100		PUD	0.00	0.00	1.00	LT		1.00	1.00	1.00	127,500.00	127,500.00	127,500							

REVIEW DATE 05/12/2019 BY KBA Total Acres: 0.00 Total Land Value: 127,500 Market: 0 Agricultural: 0 Common: 127,500 PRINTED 08/06/2024 BY SYS