LOT 197
NORTH HAMPTON PHASE 1 PB 6/215

TERRY JEAN W
85251 SHINNECOCK HILLS DR
FERNANDINA BEACH, FL 32034

2024

12-2N-27-1460-0197-0000

BUILDING CHARACTERISTICS

ELEMENT	CD	CONSTRUCTION
Exterior Wall	16	WD FR STUC 100
Roof Structur	08	IRREGULAR 100
Roof Cover	03	COMP SHNGL 100
Interior Wall	05	DRYWALL 100
Interior Floo	14	CARPET 60
Interior Floo	11	CLAY TILE 40
Air Condition	03	CENTRAL 100
Heating Type	04	AIR DUCTED 100
Bedrooms		4 100
Bathrooms		3 100
Frame	02	WOOD FRAME 100
Stories	1.5	1.5 100
Units		0 100
Occupancy	00	NONE 100
Quality	04	Quality Level 04
DOR CODE	0100	SINGLE FAMILY
MAP NUM		MKT AREA 04
NEIGHBORHOOD/LOC	4043.00	

AREA TYPE	TOTAL GROSS AREA	PCT OF BASE	TOT ADJ AREA	SUBAREA MARKET VALUE
BAS	2,041	100	2,041	266,264
FGR	483	55	266	34,702
FOP	49	30	15	1,957
FSP	373	40	149	19,439
FUS	406	100	406	52,966
TOTALS	3,352		2,877	375,327

MARKET ADJUSTMENTS

TYPE	MDL	EFF. AREA	TOT ADJ PTS	EFF. BASE RATE	REPL. COST NEW	AYB	EYB	ECON	FNCT		NORM	% COND
0900	01	2,877	114.6894	143.36	412,447	2005	2005	0	0	0	9.00	91.00

1 SNGL FAM – 100% - 2019 Heated Area: 2447 HX Base Yr 2019

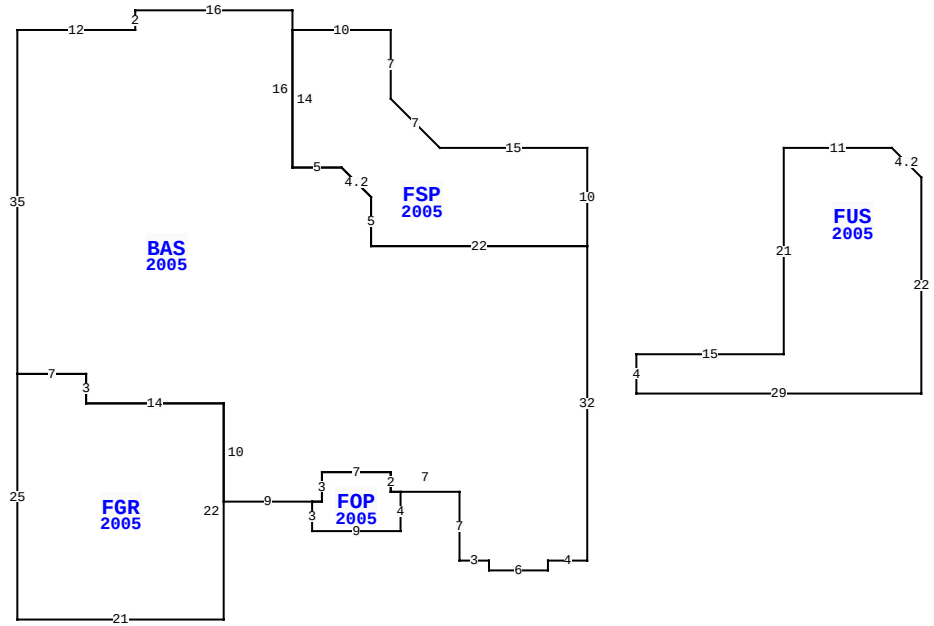

85251 SHINNECOCK HILLS DR, FERNANDINA BEACH

BLD DATE	03/29/2023 NW	LGL DATE	
XF DATE		LAND DATE	
INC DATE		AG DATE	

NASSAU COUNTY PROPERTY

PAGE 1 of 1 4

VALUATION SUMMARY

VALUATION BY		STANDARD
Tax Group: 4	Tax Dist:	
BUILDING MARKET VALUE		375,327
TOTAL MARKET OB/XF VALUE		6,397
TOTAL LAND VALUE - MARKET		127,500
TOTAL MARKET VALUE		509,224
SOH/AGL Deduction		192,717
ASSESSED VALUE		316,507
TOTAL EXEMPTION VALUE	HX HB	50,000
BASE TAXABLE VALUE		266,507
TOTAL JUST VALUE		509,224
NCON VALUE		0
INCOME VALUE		
PREVIOUS YEAR MKT VALUE		492,485

PERMIT NUM	DESCRIPTION	AMT	ISSUED
19004425	REPAIR/RRF	3,672	04/30/2019
18001197	NEW CONSTR	0	01/01/2018
E14336	ELEC OTHER	1,500	02/01/2005
M09324	MECH OTHER	0	02/01/2005
P08929	OTHER	0	02/01/2005
B0414212	NEW CONSTR	350,000	12/01/2004

SALES DATA

OFF RECORD Number	DATE	TYPE INST	Q U	V I	RSN CD	SALE PRICE
2307/0308	8/28/2019	FJ	U	I	11	0
GRANTOR: CLERK OF COURT						
GRANTEE: TERRY JEAN W						
2166/1133	12/22/2017	WD	Q	I	01	335,000
GRANTOR: SUSBILLA ROBERT T & J						
GRANTEE: HARDYMAN JEAN TERRY						

BUILDING NOTES

EXTRA FEATURES

L N	OB/XF CODE	DESCRIPTION	BLD	CAP	L	W	UNITS	UT	Adj R	ADJ UNIT PRICE	ORIG COND	YEAR ON	YEAR ACTUAL	Q	% COND	OB/XF MKT VALUE	NOTES
1	0500	FP-PRE FAB	0	100	0	0	1.00	UT	3,500.00	3,500.00	100	2005	2005	3	89	3,115	
2	0811	CONCRETE B	0	100	0	0	734.00	SF	5.20	5.20	100	2005	2005	3	86	3,282	

BUILDING DIMENSIONS

FSP=[YR=2005] N10 W15 L5 U5 N7 W10 S14 E5 R3 D3 S5 E22$
BAS=[YR=2005] W22 N5 U3 L3 W5 N16 W16 S2 W12 S35
FGR=[YR=2005] S25 E21 N22 W14 N3 W7$ E7 S3 E14 S10 E9
FOP=[YR=2005] S3 E9 N4 W1 N2 W7 S3 W1$ E1 N3 E7 S2 E7 S7 E3
S1 E6 N1 E4 N32$ PTR=E5 S11 FUS=[YR=2005] S4 E29 N22 U3 L3
W11 S21 W15$ N11 W5$.

LAND DESCRIPTION

TOTAL OB/XF 6,397

L N	USE CODE	CLS	LAND USE DESCRIPTION	CAP	R D	LOC ZONE	FRONT	DEPTH	TOT LND UTS	UNIT TYPE	D T	DPTH FACT	% COND	TOT ADJ	UNIT PRICE	ADJ UNIT PRICE	LAND VALUE	OTHER ADJUSTMENTS AND NOTES	YEAR	DENSITY	DECL	FRZ	YR	CONSRV
1	000135	C	SFR CNSVTN	100		PUD	0.00	0.00	1.00	LT		1.00	1.00	1.00	127,500.00	127,500.00	127,500							

REVIEW DATE 04/04/2019 BY TW Total Acres: 0.00 Total Land Value: 127,500 Market: 0 Agricultural: 0 Common: 127,500 PRINTED 08/06/2024 BY SYS