LOT 106
IN OR 1586/67
NORTH HAMPTON PHASE 1 PB 6/215

FINNIGAN CHARLES A & MARJORIE S
86408 EASTPORT DRIVE
FERNANDINA BEACH, FL 32034

2024

12-2N-27-1460-0106-0000

NASSAU COUNTY PROPERTY

BUILDING CHARACTERISTICS

ELEMENT	CD	CONSTRUCTION
Exterior Wall	16	WD FR STUC 100
Roof Structur	08	IRREGULAR 100
Roof Cover	03	COMP SHNGL 100
Interior Wall	05	DRYWALL 100
Interior Floo	15	HARDTILE 70
Interior Floo	14	CARPET 30
Air Condition	03	CENTRAL 100
Heating Type	04	AIR DUCTED 100
Bedrooms		3 100
Bathrooms		2.5 100
Frame	02	WOOD FRAME 100
Stories	2.	2. 100
Units		0 100
Occupancy	00	NONE 100
Quality	04	Quality Level 04
DOR CODE	0100	SINGLE FAMILY
MAP NUM		MKT AREA 04
NEIGHBORHOOD/LOC	4043.00	

AREA TYPE	TOTAL GROSS AREA	PCT OF BASE	TOT ADJ AREA	SUBAREA MARKET VALUE
BAS	1,614	100	1,614	216,781
DCK	112	10	11	1,478
FGR	494	55	272	36,533
FOP	50	30	15	2,015
FOP	144	30	43	5,775
FUS	667	100	667	89,587
TOTALS	3,081		2,622	352,168

MARKET ADJUSTMENTS

TYPE	MDL	EFF. AREA	TOT ADJ PTS	EFF. BASE RATE	REPL. COST NEW	AYB	EYB	ECON	FNCT		NORM	% COND
0900	01	2,622	120.0528	150.07	393,484	2002	2002	0	0	0	10.50	89.50

1 SNGL FAM – 100% - 2008 Heated Area: 2281 HX Base Yr 2008

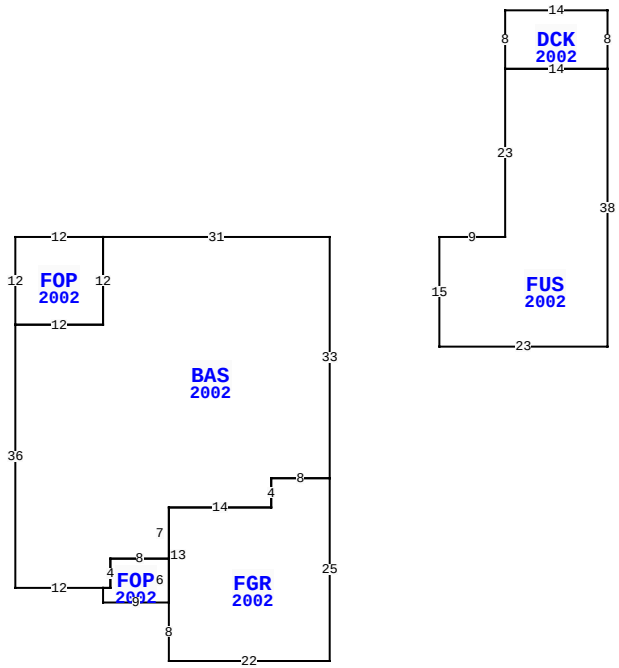

86408 EASTPORT DR, FERNANDINA BEACH

BLD DATE	03/29/2023 NW	LGL DATE	
XF DATE		LAND DATE	
INC DATE		AG DATE	

VALUATION SUMMARY

VALUATION BY		STANDARD
Tax Group: 4	Tax Dist:	
BUILDING MARKET VALUE		352,168
TOTAL MARKET OB/XF VALUE		12,175
TOTAL LAND VALUE - MARKET		127,500
TOTAL MARKET VALUE		491,843
SOH/AGL Deduction		201,398
ASSESSED VALUE		290,445
TOTAL EXEMPTION VALUE	HX HB	50,000
BASE TAXABLE VALUE		240,445
TOTAL JUST VALUE		491,843
NCON VALUE		0
INCOME VALUE		
PREVIOUS YEAR MKT VALUE		476,323

PERMIT NUM	DESCRIPTION	AMT	ISSUED
20005589	REPAIR/RRF	13,640	07/23/2020

SALES DATA

OFF RECORD Number	DATE	TYPE INST	Q U /	V I /	RSN CD	SALE PRICE
1586/0067	9/22/2008	WD	U	I	01	100
GRANTOR: FINNIGAN CHARLES A &						
GRANTEE: FINNIGAN CHARLES A						
1437/0004	8/14/2006	WD	Q	I		412,500
GRANTOR: HOWELL ORVILLE T & CO						
GRANTEE: FINNIGAN CHARLES A						

BUILDING NOTES

BUILDING DIMENSIONS

BAS=[YR=2002] W31 FOP=[YR=2002] W12 S12 E12 N12 $ S12 W12 S36 E12 FOP=[YR=2002] S2 E9 FGR=[YR=2002] S8 E22 N25 W8 S4 W14 S13 $ N6 W8 S4 W1 $ E1 N4 E8 N7 E14 N4 E8 N33 $ PTR= E15 FUS=[YR=2002] E9 N23 DCK=[YR=2002] N8 E14 S8 W14 $ E14 S38 W23 N15 $ W15 $.

EXTRA FEATURES

LN	OB/XF CODE	DESCRIPTION	BLD	CAP	L	W	UNITS	UT	Adj R	ADJ UNIT PRICE	ORIG COND	YEAR ON	YEAR ACTUAL	Q	% COND	OB/XF MKT VALUE	NOTES
1	0500	FP-PRE FAB	0	100	0	0	1.00	UT	3,500.00	3,500.00	100	2002	2002	3	86	3,010	
2	0811	CONCRETE B	0	100	0	0	660.00	SF	5.20	5.20	100	2002	2002	3	82	2,814	
3	0910	SCRN RM L	0	100	0	0	168.00	SF	15.00	15.00	100	2007	2007	3	31	781	
4	0855	CONC PAVER	0	100	0	0	633.00	SF	10.00	10.00	100	2007	2007	3	88	5,570	

LAND DESCRIPTION

TOTAL OB/XF 12,175

LN	USE CODE	CLS	LAND USE DESCRIPTION	CAP	RD	LOC ZONE	FRONT	DEPTH	TOT LND UTS	UNIT TYPE	DT	DPTH FACT	% COND	TOT ADJ	UNIT PRICE	ADJ UNIT PRICE	LAND VALUE	OTHER ADJUSTMENTS AND NOTES	YEAR	DENSITY	DECL	FRZ	YR	CONSRV
1	000134	C	SFR POND	100		PUD	0.00	0.00	1.00	LT		1.00	1.00	1.00	127,500.00	127,500.00	127,500							

REVIEW DATE 01/06/2023 BY NWA Total Acres: 0.00 Total Land Value: 127,500 Market: 0 Agricultural: 0 Common: 127,500 PRINTED 08/06/2024 BY SYS