LOT 14
NORTH HAMPTON PHASE 1 PB 6/215

FLEXON JOHN DIRK III
86080 MONTAUK DR
FERNANDINA BEACH, FL 32034

2024

12-2N-27-1460-0014-0000

BUILDING CHARACTERISTICS

ELEMENT	CD	CONSTRUCTION
Exterior Wall	16	WD FR STUC 100
Roof Structur	08	IRREGULAR 100
Roof Cover	03	COMP SHNGL 100
Interior Wall	05	DRYWALL 100
Interior Floo	13	LVT/LAMNT 50
Interior Floo	14	CARPET 50
Air Condition	03	CENTRAL 100
Heating Type	04	AIR DUCTED 100
Bedrooms		4 100
Bathrooms		3.5 100
Frame	02	WOOD FRAME 100
Stories	2.	2. 100
Units		0 100
Occupancy	00	NONE 100
Quality	04	Quality Level 04
DOR CODE	0100	SINGLE FAMILY
MAP NUM		MKT AREA 04
NEIGHBORHOOD/LOC	4043.00	

AREA TYPE	TOTAL GROSS AREA	PCT OF BASE	TOT ADJ AREA	SUBAREA MARKET VALUE
BAS	1,435	100	1,435	174,267
FGR	462	55	254	30,846
FOP	38	30	11	1,336
FSP	160	40	64	7,772
FUS	1,305	100	1,305	158,480
TOTALS	3,400		3,069	372,701

MARKET ADJUSTMENTS

TYPE	MDL	EFF. AREA	TOT ADJ PTS	EFF. BASE RATE	REPL. COST NEW	AYB	EYB	ECON	FNCT		NORM	% COND
0900	01	3,069	109.1580	136.45	418,765	2001	2001	0	0	0	11.00	89.00

1 SNGL FAM – 100% - 2022 Heated Area: 2740 HX Base Yr 2022

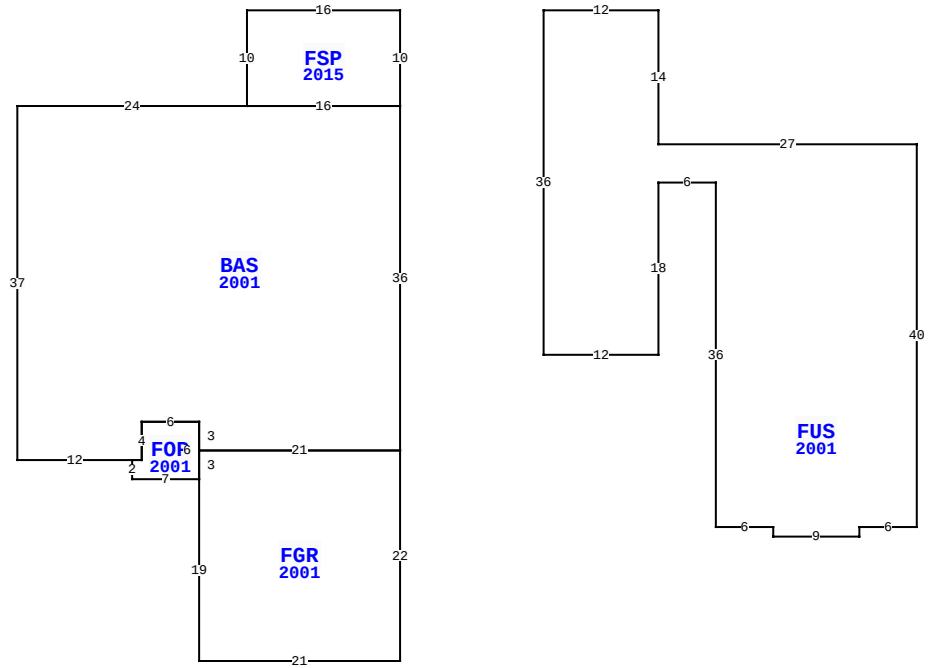

86080 MONTAUK DR, FERNANDINA BEACH

BLD DATE	03/29/2023 NW	LGL DATE	
XF DATE		LAND DATE	
INC DATE		AG DATE	

NASSAU COUNTY PROPERTY

PAGE 1 of 1 4

VALUATION SUMMARY

VALUATION BY		STANDARD
Tax Group: 4	Tax Dist:	
BUILDING MARKET VALUE		372,701
TOTAL MARKET OB/XF VALUE		13,599
TOTAL LAND VALUE - MARKET		127,500
TOTAL MARKET VALUE		513,800
SOH/AGL Deduction		111,186
ASSESSED VALUE		402,614
TOTAL EXEMPTION VALUE	HX HB	50,000
BASE TAXABLE VALUE		352,614
TOTAL JUST VALUE		513,800
NCON VALUE		0
INCOME VALUE		
PREVIOUS YEAR MKT VALUE		497,528

PERMIT NUM	DESCRIPTION	AMT	ISSUED

SALES DATA

OFF RECORD Number	DATE	TYPE INST	Q / U	V / I	RSN CD	SALE PRICE
2512/0960	10/29/2021	WD	Q	I	01	427,900
GRANTOR: ZILLOW HOMES PROPERTY						
GRANTEE: FLEXON JOHN DIRK II						
2484/0943	7/16/2021	WD	U	I	37	409,200
GRANTOR: KENDALL GENE R & MADE						
GRANTEE: ZILLOW HOMES PROPER						

BUILDING NOTES

BUILDING DIMENSIONS

FSP=[YR=2015] W16 S10 BAS=[YR=2001] W24 S37 E12
FOP=[YR=2001] S2E7 FGR=[YR=2001] S19 E21 N22 W21 S3 $ N6 W6 S4 W1 $ E1 N4 E6 S3 E21 N36 W16 $ E16 N10 $ PTR= E15
FUS=[YR=2001] E12 S14 E27 S40 W6 S1 W9 N1 W6 N36 W6 S18 W12 N36 $ W15 $.

EXTRA FEATURES

LN	OB/XF CODE	DESCRIPTION	BLD	CAP	L	W	UNITS	UT	Adj R	ADJ UNIT PRICE	ORIG COND	YEAR ON	YEAR ACTUAL	Q	% COND	OB/XF MKT VALUE	NOTES
1	0500	FP-PRE FAB	0	100	0	0	1.00	UT	3,500.00	3,500.00	100	2001	2001	3	85	2,975	
2	0810	CONCRETE A	0	100	0	0	797.00	SF	6.50	6.50	100	2001	2001	3	80	4,144	
3	1126	CB/STC 8"	0	100	0	0	36.00	SF	8.00	8.00	100	2001	2001	3	80	230	
4	0462	ST/AL FNC	0	100	0	0	744.00	SF	10.00	10.00	100	2017	2017	3	84	6,250	

LAND DESCRIPTION

TOTAL OB/XF 13,599

LN	USE CODE	CLS	LAND USE DESCRIPTION	CAP	RD	LOC ZONE	FRONT	DEPTH	TOT LND UTS	UNIT TYPE	DT	DPTH FACT	% COND	TOT ADJ	UNIT PRICE	ADJ UNIT PRICE	LAND VALUE	OTHER ADJUSTMENTS AND NOTES	YEAR	DENSITY	DECL	FRZ	YR	CONSRV
1	000134	C	SFR POND	100		PUD	0.00	0.00	1.00	LT		1.00	1.00	1.00	127,500.00	127,500.00	127,500							

REVIEW DATE 01/06/2023 BY NWA Total Acres: 0.00 Total Land Value: 127,500 Market: 0 Agricultural: 0 Common: 127,500 PRINTED 08/06/2024 BY SYS