LOT 39
IN OR 2187/1320
PLUMMER CREEK PHASE TWO B

DAVIS JASON & CHARLOTTE
78683 GOLDFINCH LANE
YULEE, FL 32097

2024

12-2N-26-1603-0039-0000

BUILDING CHARACTERISTICS

ELEMENT	CD	CONSTRUCTION
Exterior Wall	10	ABOVE AVG 100
Roof Structur	08	IRREGULAR 100
Roof Cover	03	COMP SHNGL 100
Interior Wall	05	DRYWALL 100
Interior Floo	11	CLAY TILE 50
Interior Floo	14	CARPET 50
Air Condition	03	CENTRAL 100
Heating Type	04	AIR DUCTED 100
Bedrooms		6 100
Bathrooms		4 100
Frame	02	WOOD FRAME 100
Stories	2.	2. 100
Units		0 100
Occupancy	00	NONE 100
Quality	04	Quality Level 04

DOR CODE 0100 SINGLE FAMILY
MAP NUM | MKT AREA 05
NEIGHBORHOOD/LOC 5014.00

AREA TYPE	TOTAL GROSS AREA	PCT OF BASE	TOT ADJ AREA	SUBAREA MARKET VALUE
BAS	2,316	100	2,316	250,981
FGR	399	55	219	23,733
FOP	132	30	40	4,335
FSP	112	40	45	4,876
FUS	470	100	470	50,934
STR	56	10	6	650
TOTALS	3,485		3,096	335,509

MARKET ADJUSTMENTS

TYPE	MDL	EFF. AREA	TOT ADJ PTS	EFF. BASE RATE	REPL. COST NEW	AYB	EYB	ECON	FNCT		NORM	% COND
0100	01	3,096	116.4030	110.58	342,356	2018	2018	0	0	0	2.00	98.00

1 SINGLE FAM – 100% - 2019 Heated Area: 2786 HX Base Yr 2019

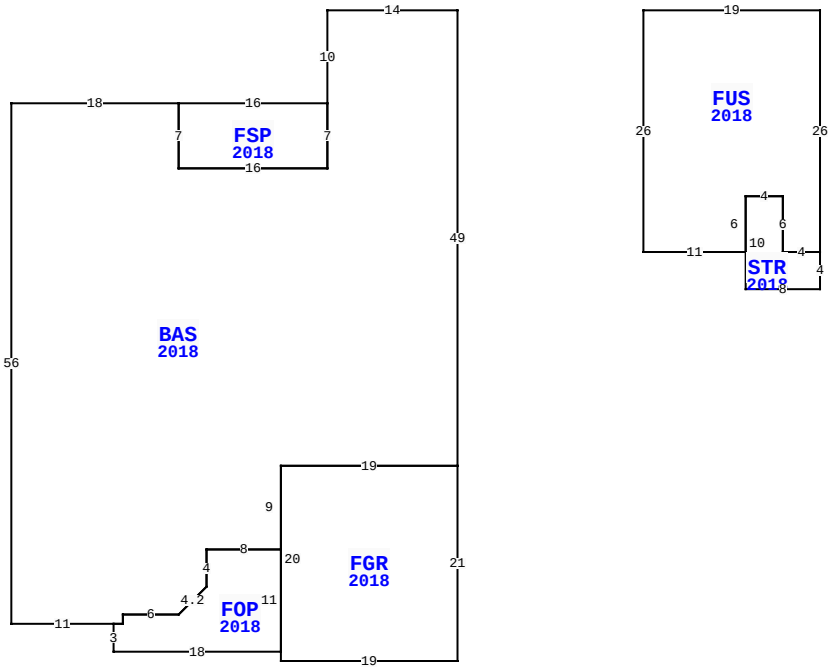

78683 GOLDFINCH LN, YULEE

BLD DATE		LGL DATE	
XF DATE		LAND DATE	
INC DATE		AG DATE	

NASSAU COUNTY PROPERTY

PAGE 1 of 1 4

VALUATION SUMMARY

VALUATION BY		STANDARD
Tax Group: 4	Tax Dist:	
BUILDING MARKET VALUE		335,509
TOTAL MARKET OB/XF VALUE		42,321
TOTAL LAND VALUE - MARKET		55,000
TOTAL MARKET VALUE		432,830
SOH/AGL Deduction		156,158
ASSESSED VALUE		276,672
TOTAL EXEMPTION VALUE	HX HB	50,000
BASE TAXABLE VALUE		226,672
TOTAL JUST VALUE		432,830
NCON VALUE		0
INCOME VALUE		
PREVIOUS YEAR MKT VALUE		418,642

PERMIT NUM	DESCRIPTION	AMT	ISSUED
20009514	ADDITION	16,228	10/09/2020
20006527	SWIM POOL	30,000	07/27/2020
17007253	CO ISSUED	0	03/28/2018
17007253	NEW CONSTR	346,894	12/01/2017

SALES DATA

OFF RECORD Number	DATE	TYPE INST	Q U /	V I /	RSN CD	SALE PRICE
2187/1320	3/29/2018	WD	Q	I	01	301,500
GRANTOR: DREAM FINDERS HOMES L						
GRANTEE: DAVIS JASON & CHARL						
2155/0698	10/26/2017	WD	Q	V	05	153,000
GRANTOR: BWC LAND PLUMMER LLC						
GRANTEE: DREAM FINDERS HOMES						

BUILDING NOTES

BUILDING DIMENSIONS

BAS=[YR=2018] W14 S10 FSP=[YR=2018] W16 S7 E16 N7$ S7 W16 N7 W18 S56 E11 FOP=[YR=2018] S3 E18 FGR=[YR=2018] S1 E19 N21 W19 S20$ N11 W8 S4 D3 L3 W6 S1 W1$ E1 N1 E6 U3 R3 N4 E8 N9 E19 N49$ PTR=E20 FUS=[YR=2018] E19 S26 STR=[YR=2018] S4 W8 N10 E4 S6 E4$ W4 N6 W4 S6 W11 N26$ W20$.

EXTRA FEATURES

LN	OB/XF CODE	DESCRIPTION	BLD	CAP	L	W	UNITS	UT	Adj R	ADJ UNIT PRICE	ORIG COND	YEAR ON	YEAR ACTUAL	Q	% COND	OB/XF MKT VALUE	NOTES
1	0810	CONCRETE A	0	100	0	0	724.00	SF	6.50	6.50	100	2018	2018	3	97	4,565	
2	0861	POOL GUNIT	0	100	0	0	288.00	SF	85.00	85.00	100	2020	2020	3	93	22,766	
3	0855	CONC PAVER	0	100	0	0	216.00	SF	10.00	10.00	100	2020	2020	3	99	2,138	
4	0911	SCRN RM A	0	100	24	34	816.00	SF	17.50	17.50	100	2020	2020	3	90	12,852	

LAND DESCRIPTION

TOTAL OB/XF 42,321

LN	USE CODE	CLS	LAND USE DESCRIPTION	CAP	RD	LOC ZONE	FRONT	DEPTH	TOT LND UTS	UNIT TYPE	DT	DPTH FACT	% COND	TOT ADJ	UNIT PRICE	ADJ UNIT PRICE	LAND VALUE	OTHER ADJUSTMENTS AND NOTES	YEAR	DENSITY	DECL	FRZ	YR	CONSRV
1	000100	C	SFR	100		PUD	0.00	0.00	1.00	LT		1.00	1.00	1.00	55,000.00	55,000.00	55,000							

REVIEW DATE 01/06/2023 BY KWA Total Acres: 0.00 Total Land Value: 55,000 Market: 0 Agricultural: 0 Common: 55,000 PRINTED 08/06/2024 BY SYS