LOT 59
PLUMMER CREEK PHASE TWO A
PBK 8/142

BIRD TOMMIE L JR & CHERYL R ELLIS
2921 CROSSING DR
CHESAPEAKE, VA 23321

2024

12-2N-26-1602-0059-0000

NASSAU COUNTY PROPERTY

BUILDING CHARACTERISTICS

ELEMENT	CD	CONSTRUCTION
Exterior Wall	10	ABOVE AVG 90
Exterior Wall	21	STONE 10
Roof Structur	08	IRREGULAR 100
Roof Cover	03	COMP SHNGL 100
Interior Wall	05	DRYWALL 90
Interior Wall	06	CUST PANEL 10
Interior Floo	11	CLAY TILE 50
Interior Floo	14	CARPET 50
Air Condition	03	CENTRAL 100
Heating Type	04	AIR DUCTED 100
Bedrooms		5 100
Bathrooms		4 100
Frame	02	WOOD FRAME 100
Stories	2.	2. 100
Units		0 100
Occupancy	00	NONE 100
Quality	04	Quality Level 04

DOR CODE	0100	SINGLE FAMILY	
MAP NUM		MKT AREA	05
NEIGHBORHOOD/LOC	5013.00		

AREA TYPE	TOTAL GROSS AREA	PCT OF BASE	TOT ADJ AREA	SUBAREA MARKET VALUE
BAS	2,494	100	2,494	261,572
FGR	622	55	342	35,870
FOP	65	30	20	2,098
FOP	208	30	62	6,502
FUS	680	100	680	71,318
PTO	512	5	26	2,727
STR	30	10	3	315
TOTALS	4,611		3,627	380,402

MARKET ADJUSTMENTS

TYPE	MDL	EFF. AREA	TOT ADJ PTS	EFF. BASE RATE	REPL. COST NEW	AYB	EYB	ECON	FNCT		NORM	% COND
0100	01	3,627	113.8725	108.18	392,369	2016	2016	0	0	0	3.05	96.95

1 SINGLE FAM – 0% - 2024 Heated Area: 3174 HX Base Yr

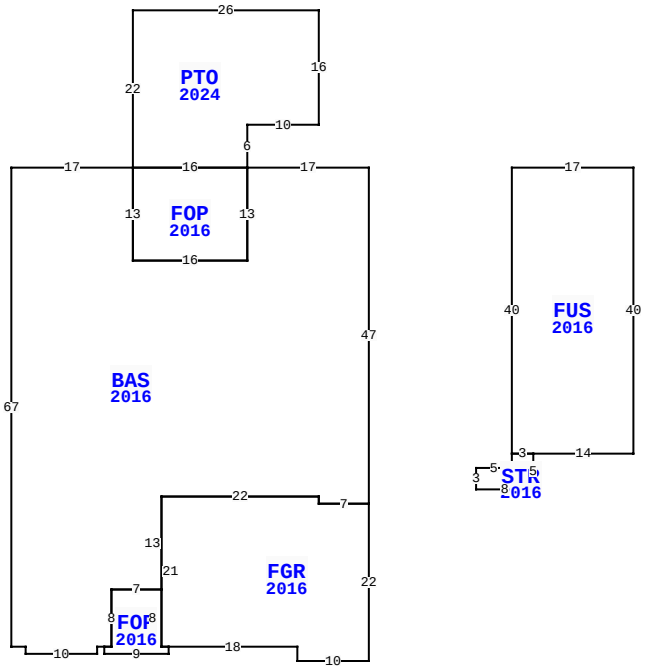

86021 BLACK TERN DR, YULEE

BLD DATE		LGL DATE	
XF DATE		LAND DATE	
INC DATE		AG DATE	

VALUATION SUMMARY

VALUATION BY	STANDARD
Tax Group: 4	Tax Dist:
BUILDING MARKET VALUE	380,402
TOTAL MARKET OB/XF VALUE	6,908
TOTAL LAND VALUE - MARKET	55,000
TOTAL MARKET VALUE	442,310
SOH/AGL Deduction	0
ASSESSED VALUE	442,310
TOTAL EXEMPTION VALUE	0
BASE TAXABLE VALUE	442,310
TOTAL JUST VALUE	442,310
NCON VALUE	6,184
INCOME VALUE	
PREVIOUS YEAR MKT VALUE	419,359

PERMIT NUM	DESCRIPTION	AMT	ISSUED
B1632117	CO ISSUED	0	08/16/2016
B1632117	NEW CONSTR	395,061	04/01/2016

SALES DATA

OFF RECORD Number	DATE	TYPE INST	Q / U	V / I	RSN CD	SALE PRICE
2662/313	8/18/2023	WD	Q	I	01	568,000
GRANTOR: PALM TYLER & JESSICA						
GRANTEE: BIRD TOMMIE L JR &						
2068/1783	8/24/2016	WD	Q	I	01	314,900
GRANTOR: DREAM FINDERS HOMES L						
GRANTEE: PALM TYLER & JESSIC						

BUILDING NOTES

BUILDING DIMENSIONS

BAS=[YR=2016;ORIG=0,0] W17 S13 W16 N13 W17 S67 E2 S1 E10 N1 E1 E1 N8 E7 N13 E22 S1 E7 N47 $
FUS=[YR=2016;ORIG=20,0] E17 S40 W14 W3 N40 $
FGR=[YR=2016;ORIG=-28,67] E18 S2 E10 N22 W7 N1 W22 S21 E1 $
FOP=[YR=2016;ORIG=-17,0] W16 S13 E16 N13 $
FOP=[YR=2016;ORIG=-37,67] S1 E9 N1 W1 N8 W7 S8 W1 $
STR=[YR=2016;ORIG=23,40] S5 W8 N3 E5 N2 E3 $
PTR=[ORIG=0,0] E20 W20 $
PTO=[YR=2024;ORIG=-33,0] E16 N6 E10 N16 W26 S22 $
.

EXTRA FEATURES

LN	OB/XF CODE	DESCRIPTION	BLD	CAP	L	W	UNITS	UT	Adj R	ADJ UNIT PRICE	ORIG COND	YEAR ON	YEAR ACTUAL	Q	% COND	OB/XF MKT VALUE	NOTES
1	0811	CONCRETE B	0	0	0	0	1,082.00	SF	5.20	5.20	100	2016	2016	3	96	5,401	
2	0462	ST/AL FNC	0	0	0	0	186.00	SF	10.00	10.00	100	2016	2016	3	81	1,507	

LAND DESCRIPTION

TOTAL OB/XF 6,908

LN	USE CODE	CLS	LAND USE DESCRIPTION	CAP	RD	LOC ZONE	FRONT	DEPTH	TOT LND UTS	UNIT TYPE	DT	DPTH FACT	% COND	TOT ADJ	UNIT PRICE	ADJ UNIT PRICE	LAND VALUE	OTHER ADJUSTMENTS AND NOTES	YEAR	DENSITY	DECL	FRZ	YR	CONSRV
1	000100	C	SFR	0		PUD	0.00	0.00	1.00	LT		1.00	1.00	1.00	55,000.00	55,000.00	55,000							

REVIEW DATE 08/10/2022 BY KBA Total Acres: 0.00 Total Land Value: 55,000 Market: 0 Agricultural: 0 Common: 55,000 PRINTED 08/06/2024 BY SYS