LOT 2
PLUMMER CREEK PHASE TWO A
PBK 8/142

DOWLING EVELENA
79559 PLUMMERS CREEK DR
YULEE, FL 32097

2024

12-2N-26-1602-0002-0000

BUILDING CHARACTERISTICS

ELEMENT	CD	CONSTRUCTION
Exterior Wall	10	ABOVE AVG 100
Roof Structur	03	GABLE/HIP 100
Roof Cover	03	COMP SHNGL 100
Interior Wall	05	DRYWALL 100
Interior Floo	11	CLAY TILE 70
Interior Floo	14	CARPET 30
Air Condition	03	CENTRAL 100
Heating Type	04	AIR DUCTED 100
Bedrooms		3 100
Bathrooms		2 100
Frame	02	WOOD FRAME 100
Stories	1.	1. 100
Units		0 100
Occupancy	00	NONE 100
Quality	04	Quality Level 04
DOR CODE	0100	SINGLE FAMILY
MAP NUM		MKT AREA 05
NEIGHBORHOOD/LOC	5013.00	

AREA TYPE	TOTAL GROSS AREA	PCT OF BASE	TOT ADJ AREA	SUBAREA MARKET VALUE
BAS	1,961	100	1,961	218,864
FGR	712	55	392	43,750
FOP	54	30	16	1,786
FOP	110	30	33	3,684
PTO	72	5	4	447
PTO	128	5	6	670
TOTALS	3,037		2,412	269,199

MARKET ADJUSTMENTS

TYPE	MDL	EFF. AREA	TOT ADJ PTS	EFF. BASE RATE	REPL. COST NEW	AYB	EYB	ECON	FNCT		NORM	% COND
0100	01	2,412	120.4959	114.47	276,102	2017	2017	0	0	0	2.50	97.50

1 SINGLE FAM – 0% - 2024 Heated Area: 1961 HX Base Yr

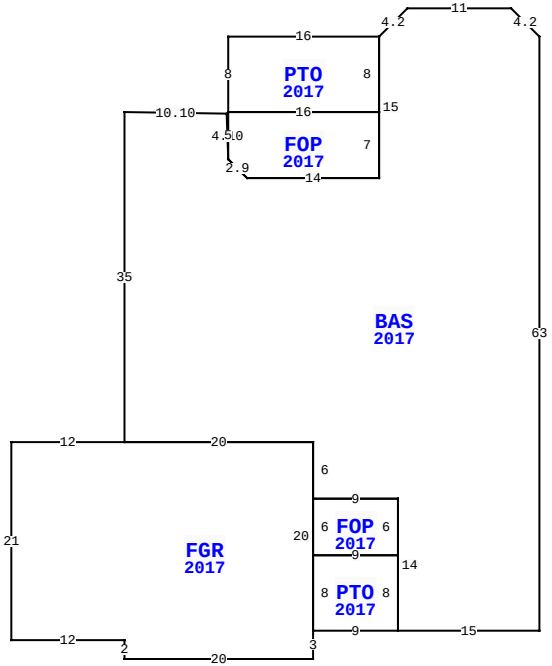

79559 PLUMMERS CREEK DR, YULEE

BLD DATE		LGL DATE	
XF DATE		LAND DATE	
INC DATE		AG DATE	

NASSAU COUNTY PROPERTY

PAGE 1 of 1 4

VALUATION SUMMARY

VALUATION BY	STANDARD
Tax Group: 4	Tax Dist:
BUILDING MARKET VALUE	269,199
TOTAL MARKET OB/XF VALUE	11,539
TOTAL LAND VALUE - MARKET	55,000
TOTAL MARKET VALUE	335,738
SOH/AGL Deduction	0
ASSESSED VALUE	335,738
TOTAL EXEMPTION VALUE	0
BASE TAXABLE VALUE	335,738
TOTAL JUST VALUE	335,738
NCON VALUE	0
INCOME VALUE	
PREVIOUS YEAR MKT VALUE	327,800

PERMIT NUM	DESCRIPTION	AMT	ISSUED
1705715	CO ISSUED	0	06/28/2017
1700344	NEW CONSTR	250,163	02/07/2017

SALES DATA

OFF RECORD Number	DATE	TYPE INST	Q U	V I	RSN CD	SALE PRICE
2611/1446	1/05/2023	WD	Q	I	01	427,000
GRANTOR: FOGLE JEREMY & ASHLY						
GRANTEE: DOWLING EVELENA						
2497/1017	9/16/2021	WD	Q	I	01	381,000
GRANTOR: PARKER TIMOTHY P & AM						
GRANTEE: FOGLE JEREMY & ASHL						

BUILDING NOTES

BUILDING DIMENSIONS

BAS=[YR=2017;ORIG=0,0] U3L3 W11 D3L3 S15 W14 U2L2 U4.10L0.2
U0.2L10.10 S35 E20 S6 E9 S14 E15 N63 $
FGR=[YR=2017;ORIG=-44,43] W12 S21 E12 S2 E20 N3 N20 W20 $
PTO=[YR=2017;ORIG=-17,0] W16 S8 E16 N8 $
FOP=[YR=2017;ORIG=-33,8] S5 D2R2 E14 N7 W16 $
PTO=[YR=2017;ORIG=-24,63] E9 N8 W9 S8 $
FOP=[YR=2017;ORIG=-15,55] N6 W9 S6 E9 $
.

EXTRA FEATURES

LN	OB/XF CODE	DESCRIPTION	BLD	CAP	L	W	UNITS	UT	Adj R	ADJ UNIT PRICE	ORIG COND	YEAR ON	YEAR ACTUAL	Q	% COND	OB/XF MKT VALUE	NOTES
1	0811	CONCRETE B	0	0	0	0	1,228.00	SF	5.20	5.20	100	2017	2017	3	97	6,194	
2	0476	VF 6 SBPL	0	0	0	0	174.00	LF	32.00	32.00	100	2020	2020	3	96	5,345	

LAND DESCRIPTION

TOTAL OB/XF 11,539

LN	USE CODE	CLS	LAND USE DESCRIPTION	CAP	RD	LOC ZONE	FRONT	DEPTH	TOT LND UTS	UNIT TYPE	DT	DPTH FACT	% COND	TOT ADJ	UNIT PRICE	ADJ UNIT PRICE	LAND VALUE	OTHER ADJUSTMENTS AND NOTES	YEAR	DENSITY	DECL	FRZ	YR	CONSRV
1	000100	C	SFR	0		PUD	0.00	0.00	1.00	LT		1.00	1.00	1.00	55,000.00	55,000.00	55,000							

REVIEW DATE 06/25/2021 BY KBA Total Acres: 0.00 Total Land Value: 55,000 Market: 0 Agricultural: 0 Common: 55,000 PRINTED 08/06/2024 BY SYS