LOT 142
IN OR 1928/1874
PLUMMER CREEK #1 PB 8/28

RAINES STEPHEN & BROOKE A
83018 PURPLE MARTIN DR
YULEE, FL 32097

2024

12-2N-26-1601-0142-0000

BUILDING CHARACTERISTICS

ELEMENT	CD	CONSTRUCTION
Exterior Wall	10	ABOVE AVG 90
Exterior Wall	21	STONE 10
Roof Structur	08	IRREGULAR 100
Roof Cover	03	COMP SHNGL 100
Interior Wall	05	DRYWALL 100
Interior Floo	11	CLAY TILE 100
Air Condition	03	CENTRAL 100
Heating Type	04	AIR DUCTED 100
Bedrooms		6 100
Bathrooms		4 100
Frame	02	WOOD FRAME 100
Stories	2.	2. 100
Units		0 100
Occupancy	00	NONE 100
Quality	04	Quality Level 04

DOR CODE 0100 SINGLE FAMILY
MAP NUM | MKT AREA 05
NEIGHBORHOOD/LOC 5013.00

AREA TYPE	TOTAL GROSS AREA	PCT OF BASE	TOT ADJ AREA	SUBAREA MARKET VALUE
BAS	2,526	100	2,526	271,769
FGR	580	55	319	34,320
FOP	66	30	20	2,152
FSP	208	40	83	8,930
FUS	680	100	680	73,160
PTO	600	5	30	3,228
STR	27	10	3	322
TOTALS	4,687		3,661	393,882

MARKET ADJUSTMENTS

TYPE	MDL	EFF. AREA	TOT ADJ PTS	EFF. BASE RATE	REPL. COST NEW	AYB	EYB	ECON	FNCT		NORM	% COND
0100	01	3,661	118.0305	112.13	410,508	2014	2014	0	0	0	4.05	95.95

1 SINGLE FAM – 100% - 2015 Heated Area: 3206 HX Base Yr 2015

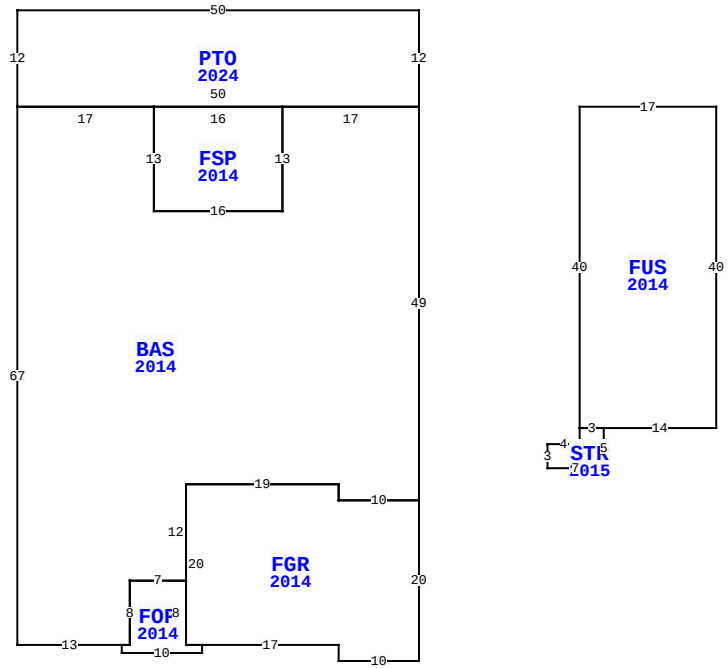

83018 PURPLE MARTIN DR, YULEE

BLD DATE		LGL DATE	
XF DATE		LAND DATE	
INC DATE		AG DATE	

NASSAU COUNTY PROPERTY

PAGE 1 of 1 4

VALUATION SUMMARY

VALUATION BY		STANDARD
Tax Group: 4	Tax Dist:	
BUILDING MARKET VALUE		393,882
TOTAL MARKET OB/XF VALUE		5,595
TOTAL LAND VALUE - MARKET		55,000
TOTAL MARKET VALUE		454,477
SOH/AGL Deduction		183,831
ASSESSED VALUE		270,646
TOTAL EXEMPTION VALUE	HX HB	50,000
BASE TAXABLE VALUE		220,646
TOTAL JUST VALUE		454,477
NCON VALUE		0
INCOME VALUE		
PREVIOUS YEAR MKT VALUE		433,639

PERMIT NUM	DESCRIPTION	AMT	ISSUED
B1428413	CO ISSUED	0	08/06/2015
B1428413	NEW CONSTR	381,947	03/01/2014

SALES DATA

OFF RECORD Number	DATE	TYPE INST	Q / U	V / I	RSN CD	SALE PRICE
1928/1874	7/10/2014	WD	Q	I	01	266,800
GRANTOR: DREAM FINDERS HOMES L						
GRANTEE: RAINES STEPHEN & BR						
1900/0964	1/31/2014	SW	Q	V	05	419,500
GRANTOR: BWC LAND PLUMMER LLC						
GRANTEE: DREAM FINDERS HOMES						

BUILDING NOTES

BUILDING DIMENSIONS

BAS=[YR=2014;ORIG=0,0] W17 S13 W16 N13 W17 S67 E13 E1 N8 E7 N12 E19 S2 E10 N49 $
FUS=[YR=2014;ORIG=20,0] E17 S40 W14 W3 N40 $
FGR=[YR=2014;ORIG=-27,67] E17 S2 E10 N20 W10 N2 W19 S20 E2 $
FSP=[YR=2014;ORIG=-17,0] W16 S13 E16 N13 $
FOP=[YR=2014;ORIG=-37,67] S1 E10 N1 W2 N8 W7 S8 W1 $
STR=[YR=2015;ORIG=23,40] S5 W7 N3 E4 N2 E3 $
PTR=[ORIG=0,0] E20 W20 $
PTO=[YR=2024;ORIG=-50,-12] E50 S12 W50 N12 $
.

EXTRA FEATURES

LN	OB/XF CODE	DESCRIPTION	BLD	CAP	L	W	UNITS	UT	Adj R	ADJ UNIT PRICE	ORIG COND	YEAR ON	YEAR ACTUAL	Q	% COND	OB/XF MKT VALUE	NOTES
1	0810	CONCRETE A	0	100	0	0	906.00	SF	6.50	6.50	100	2014	2014	3	95	5,595	

LAND DESCRIPTION

TOTAL OB/XF 5,595

LN	USE CODE	CLS	LAND USE DESCRIPTION	CAP	RD	LOC ZONE	FRONT	DEPTH	TOT LND UTS	UNIT TYPE	DT	DPTH FACT	% COND	TOT ADJ	UNIT PRICE	ADJ UNIT PRICE	LAND VALUE	OTHER ADJUSTMENTS AND NOTES	YEAR	DENSITY	DECL	FRZ	YR	CONSRV
1	000100	C	SFR	100		PUD	0.00	0.00	1.00	LT		1.00	1.00	1.00	55,000.00	55,000.00	55,000							

REVIEW DATE 06/16/2020 BY KBA Total Acres: 0.00 Total Land Value: 55,000 Market: 0 Agricultural: 0 Common: 55,000 PRINTED 08/06/2024 BY SYS