LOT 111
IN OR 2199/1103
PLUMMER CREEK #1 PB 8/28

LOVE ANTHONY M
83355 PURPLE MARTIN DR
YULEE, FL 32097

2024

12-2N-26-1601-0111-0000

NASSAU COUNTY PROPERTY

BUILDING CHARACTERISTICS

ELEMENT	CD	CONSTRUCTION
Exterior Wall	10	ABOVE AVG 90
Exterior Wall	21	STONE 10
Roof Structur	03	GABLE/HIP 100
Roof Cover	03	COMP SHNGL 100
Interior Wall	05	DRYWALL 100
Interior Floo	14	CARPET 60
Interior Floo	11	CLAY TILE 40
Air Condition	03	CENTRAL 100
Heating Type	04	AIR DUCTED 100
Bedrooms		4 100
Bathrooms		2.5 100
Frame	02	WOOD FRAME 100
Stories	2.	2. 100
Units		0 100
Occupancy	00	NONE 100
Quality	04	Quality Level 04
DOR CODE	0100	SINGLE FAMILY
MAP NUM		MKT AREA 05
NEIGHBORHOOD/LOC	5013.00	

AREA TYPE	TOTAL GROSS AREA	PCT OF BASE	TOT ADJ AREA	SUBAREA MARKET VALUE
BAS	1,521	100	1,521	151,693
FGR	506	55	278	27,726
FOP	110	30	33	3,291
FOP	130	30	39	3,890
FUS	1,471	100	1,471	146,707
STR	45	10	4	398
TOTALS	3,783		3,346	333,705

MARKET ADJUSTMENTS

TYPE	MDL	EFF. AREA	TOT ADJ PTS	EFF. BASE RATE	REPL. COST NEW	AYB	EYB	ECON	FNCT		NORM	% COND
0100	01	3,346	108.2886	102.87	344,203	2016	2016	0	0	0	3.05	96.95

1 SINGLE FAM – 0% - 0 Heated Area: 2992 HX Base Yr

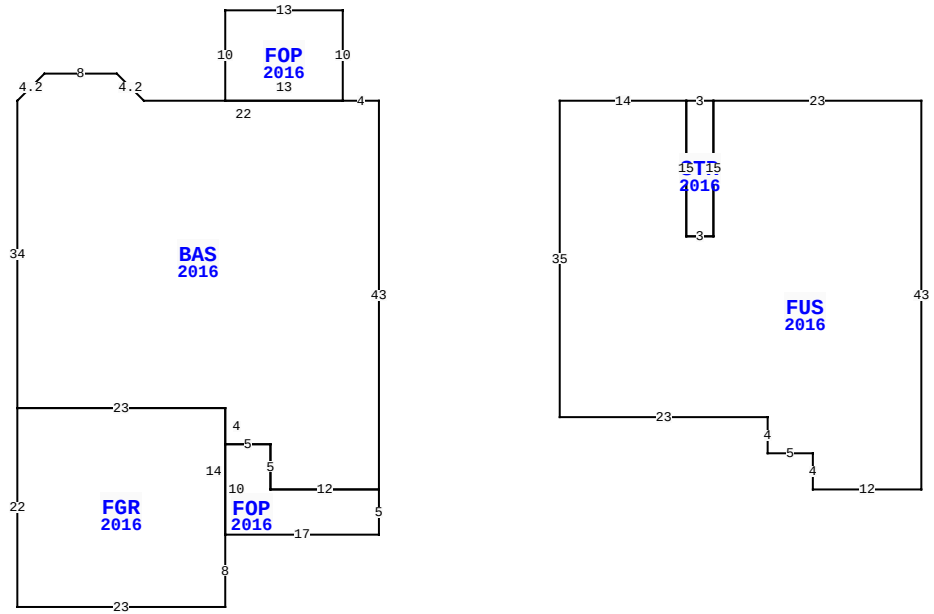

83355 PURPLE MARTIN DR, YULEE

BLD DATE		LGL DATE	
XF DATE		LAND DATE	
INC DATE		AG DATE	

VALUATION SUMMARY

VALUATION BY	STANDARD
Tax Group: 4	Tax Dist:
BUILDING MARKET VALUE	333,705
TOTAL MARKET OB/XF VALUE	13,209
TOTAL LAND VALUE - MARKET	55,000
TOTAL MARKET VALUE	401,914
SOH/AGL Deduction	11,341
ASSESSED VALUE	390,573
TOTAL EXEMPTION VALUE	0
BASE TAXABLE VALUE	390,573
TOTAL JUST VALUE	401,914
NCON VALUE	0
INCOME VALUE	
PREVIOUS YEAR MKT VALUE	387,022

PERMIT NUM	DESCRIPTION	AMT	ISSUED
B1531205	CO ISSUED	0	02/05/2016
B1531205	NEW CONSTR	362,630	09/01/2015

SALES DATA

OFF RECORD Number	DATE	TYPE INST	Q / U	V / I	RSN CD	SALE PRICE
2199/1103	5/21/2018	WD	U	I	11	100
GRANTOR: LOVE ANTHONY M & ANGE						
GRANTEE: LOVE ANTHONY M						
2026/0994	1/28/2016	WD	Q	I	01	241,300
GRANTOR: DREAM FINDERS HOMES L						
GRANTEE: LOVE ANTHONY M						

BUILDING NOTES

BUILDING DIMENSIONS

BAS=[YR=2016] W4 FOP=[YR=2016] N10 W13 S10 E13$ W22 U3 L3 W8 D3 L3 S34 FGR=[YR=2016] S22 E23 N8 FOP=[YR=2016] E17 N5 W12 N5 W5 S10$ N14 W23$ E23 S4 E5 S5 E12 N43$ PTR=E20 FUS=[YR=2016] E14 STR=[YR=2016] E3 S15 W3 N15$ S15 E3 N15 E23 S43 W12 N4 W5 N4 W23 N35$ W20$.

EXTRA FEATURES

LN	OB/XF CODE	DESCRIPTION	BLD	CAP	L	W	UNITS	UT	Adj R	ADJ UNIT PRICE	ORIG COND	YEAR ON	YEAR ACTUAL	Q	% COND	OB/XF MKT VALUE	NOTES
1	0810	CONCRETE A	0	0	0	0	785.00	SF	6.50	6.50	100	2016	2016	3	96	4,898	
2	0476	VF 6 SBPL	0	0	0	0	150.00	LF	32.00	32.00	100	2020	2020	3	96	4,608	
3	0855	CONC PAVER	0	0	0	0	374.00	SF	10.00	10.00	100	2020	2020	3	99	3,703	

LAND DESCRIPTION

TOTAL OB/XF 13,209

LN	USE CODE	CLS	LAND USE DESCRIPTION	CAP	RD	LOC ZONE	FRONT	DEPTH	TOT LND UTS	UNIT TYPE	DT	DPTH FACT	% COND	TOT ADJ	UNIT PRICE	ADJ UNIT PRICE	LAND VALUE	OTHER ADJUSTMENTS AND NOTES	YEAR	DENSITY	DECL	FRZ	YR	CONSRV
1	000100	C	SFR	0		PUD	0.00	0.00	1.00	LT		1.00	1.00	1.00	55,000.00	55,000.00	55,000							

REVIEW DATE 06/22/2021 BY KBA Total Acres: 0.00 Total Land Value: 55,000 Market: 0 Agricultural: 0 Common: 55,000 PRINTED 08/06/2024 BY SYS