LOT 33
IN OR 2194/468
PLUMMER CREEK #1 PB 8/28

NORMAN RANDALL
79653 PLUMMERS CREEK DR
YULEE, FL 32097

2024

12-2N-26-1601-0033-0000

BUILDING CHARACTERISTICS

ELEMENT	CD	CONSTRUCTION
Exterior Wall	10	ABOVE AVG 90
Exterior Wall	21	STONE 10
Roof Structur	08	IRREGULAR 100
Roof Cover	03	COMP SHNGL 100
Interior Wall	05	DRYWALL 100
Interior Floo	11	CLAY TILE 60
Interior Floo	14	CARPET 40
Air Condition	03	CENTRAL 100
Heating Type	04	AIR DUCTED 100
Bedrooms		6 100
Bathrooms		3 100
Frame	02	WOOD FRAME 100
Stories	2.	2. 100
Units		0 100
Occupancy	00	NONE 100
Quality	04	Quality Level 04
DOR CODE	0100	SINGLE FAMILY
MAP NUM		MKT AREA 05
NEIGHBORHOOD/LOC	5013.00	

AREA TYPE	TOTAL GROSS AREA	PCT OF BASE	TOT ADJ AREA	SUBAREA MARKET VALUE
BAS	2,355	100	2,355	248,220
FGR	441	55	243	25,613
FOP	57	30	17	1,791
FSP	112	40	45	4,743
FUS	470	100	470	49,539
PTO	128	5	6	632
STR	45	10	4	421
TOTALS	3,608		3,140	330,959

MARKET ADJUSTMENTS

TYPE	MDL	EFF. AREA	TOT ADJ PTS	EFF. BASE RATE	REPL. COST NEW	AYB	EYB	ECON	FNCT		NORM	% COND
0100	01	3,140	115.6302	109.85	344,929	2014	2014	0	0	0	4.05	95.95

1 SINGLE FAM – 100% - 2020 Heated Area: 2825 HX Base Yr 2020

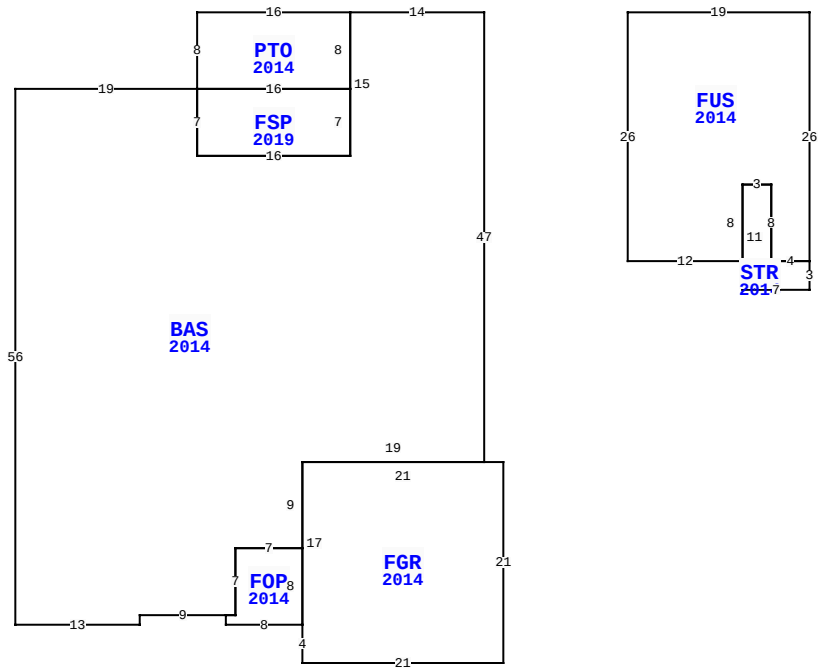

79653 PLUMMERS CREEK DR, YULEE

BLD DATE		LGL DATE	
XF DATE		LAND DATE	
INC DATE		AG DATE	

NASSAU COUNTY PROPERTY

PAGE 1 of 1 4

VALUATION SUMMARY

VALUATION BY		STANDARD
Tax Group: 4	Tax Dist:	
BUILDING MARKET VALUE		330,959
TOTAL MARKET OB/XF VALUE		9,899
TOTAL LAND VALUE - MARKET		55,000
TOTAL MARKET VALUE		395,858
SOH/AGL Deduction		75,796
ASSESSED VALUE		320,062
TOTAL EXEMPTION VALUE	HX HB WR	55,000
BASE TAXABLE VALUE		265,062
TOTAL JUST VALUE		395,858
NCON VALUE		0
INCOME VALUE		
PREVIOUS YEAR MKT VALUE		381,150

PERMIT NUM	DESCRIPTION	AMT	ISSUED
B1428910	CO ISSUED	0	09/24/2014
B1428910	NEW CONSTR	332,080	06/01/2014

SALES DATA

OFF RECORD Number	DATE	TYPE INST	Q U /	V I /	RSN CD	SALE PRICE
2194/0468	5/01/2018	WD	Q	I	01	325,000
GRANTOR: CAREY DARLENE C & DAN						
GRANTEE: NORMAN RENATA & RAN						
1941/1019	9/29/2014	WD	Q	I	01	255,800
GRANTOR: DREAM FINDERS HOMES L						
GRANTEE: CAREY DARLENE C & D						

BUILDING NOTES

BUILDING DIMENSIONS

BAS=[YR=2014] W14 PTO=[YR=2014] W16 S8 FSP=[YR=2019] S7 E16 N7 W16$ E16 N8$ S15 W16 N7 W19 S56 E13 N1 E9 FOP=[YR=2014] S1 E8 FGR=[YR=2014] S4 E21 N21 W21 S17$ N8 W7 S7 W1$ E1 N7 E7 N9 E19 N47$ PTR=E15 FUS=[YR=2014] E19 S26 STR=[YR=2014] S3 W7 N11 E3 S8 E4$ W4 N8 W3 S8 W12 N26$ W15$.

EXTRA FEATURES

LN	OB/XF CODE	DESCRIPTION	BLD	CAP	L	W	UNITS	UT	Adj R	ADJ UNIT PRICE	ORIG COND	YEAR ON	YEAR ACTUAL	Q	% COND	OB/XF MKT VALUE	NOTES
1	0810	CONCRETE A	0	100	0	0	816.00	SF	6.50	6.50	100	2014	2014	3	95	5,039	
2	0462	ST/AL FNC	0	100	0	0	648.00	SF	10.00	10.00	100	2014	2014	3	75	4,860	

LAND DESCRIPTION

TOTAL OB/XF 9,899

LN	USE CODE	CLS	LAND USE DESCRIPTION	CAP	RD	LOC ZONE	FRONT	DEPTH	TOT LND UTS	UNIT TYPE	DT	DPTH FACT	% COND	TOT ADJ	UNIT PRICE	ADJ UNIT PRICE	LAND VALUE	OTHER ADJUSTMENTS AND NOTES	YEAR	DENSITY	DECL	FRZ	YR	CONSRV
1	000100	C	SFR	100		PUD	0.00	0.00	1.00	LT		1.00	1.00	1.00	55,000.00	55,000.00	55,000							

REVIEW DATE 05/26/2020 BY KBA Total Acres: 0.00 Total Land Value: 55,000 Market: 0 Agricultural: 0 Common: 55,000 PRINTED 08/06/2024 BY SYS