LOT 24
PT OR 2093/1197
WHITE OAKS SUB PB 5/230

ADAM CHRISTINA M & TIMOTHY RICHARD SR/
55234 WHITE OAK PL
CALLAHAN, FL 32011

2024

12-2N-25-2350-0024-0000

NASSAU COUNTY PROPERTY

BUILDING CHARACTERISTICS

ELEMENT	CD	CONSTRUCTION
Exterior Wall	20	FACE BRICK 100
Roof Structur	03	GABLE/HIP 100
Roof Cover	03	COMP SHNGL 100
Interior Wall	05	DRYWALL 100
Interior Floo	14	CARPET 60
Interior Floo	11	CLAY TILE 40
Air Condition	03	CENTRAL 100
Heating Type	04	AIR DUCTED 100
Bedrooms		3 100
Bathrooms		3 100
Frame	02	WOOD FRAME 100
Stories	1.	1. 100
Units		0 100
Occupancy	00	NONE 100
Quality	02	Quality Level 02
DOR CODE	0100	SINGLE FAMILY
MAP NUM		MKT AREA 08
NEIGHBORHOOD/LOC	8026.00	

AREA TYPE	TOTAL GROSS AREA	PCT OF BASE	TOT ADJ AREA	SUBAREA MARKET VALUE
BAS	2,114	100	2,114	252,645
BAS	126	100	126	15,059
FGR	782	55	430	51,390
FOP	156	30	47	5,617
FST	42	55	23	2,749
UOP	80	20	16	1,912
TOTALS	3,300		2,756	329,370

MARKET ADJUSTMENTS

TYPE	MDL	EFF. AREA	TOT ADJ PTS	EFF. BASE RATE	REPL. COST NEW	AYB	EYB	ECON	FNCT		NORM	% COND
0900	01	2,756	105.0624	131.33	361,945	2006	2011	0	0	0	9.00	91.00

1 SNGL FAM – 0% - 0 Heated Area: 2240 HX Base Yr

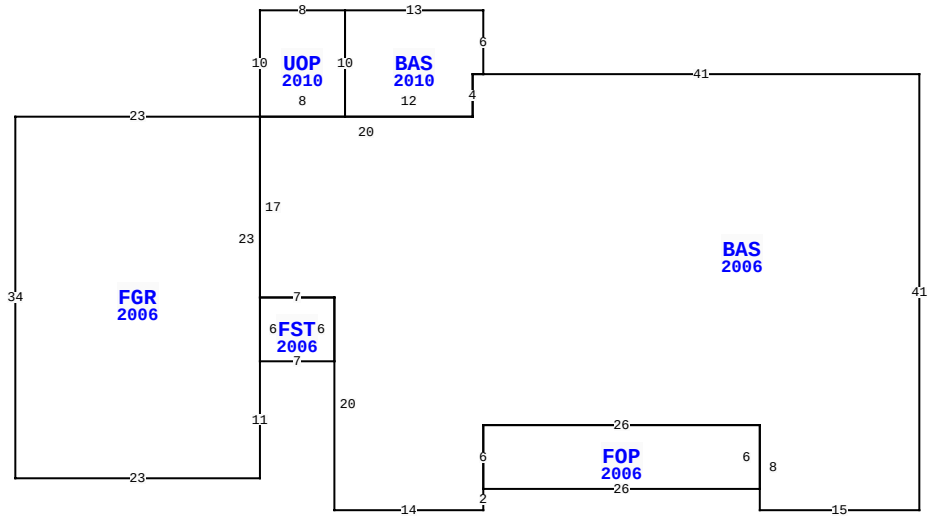

55234 WHITE OAKS PL, CALLAHAN

BLD DATE		LGL DATE	
XF DATE		LAND DATE	
INC DATE		AG DATE	

VALUATION SUMMARY

VALUATION BY	STANDARD
Tax Group: 6	Tax Dist:
BUILDING MARKET VALUE	329,370
TOTAL MARKET OB/XF VALUE	27,017
TOTAL LAND VALUE - MARKET	45,000
TOTAL MARKET VALUE	401,387
SOH/AGL Deduction	76,796
ASSESSED VALUE	324,591
TOTAL EXEMPTION VALUE	0
BASE TAXABLE VALUE	324,591
TOTAL JUST VALUE	401,387
NCON VALUE	0
INCOME VALUE	
PREVIOUS YEAR MKT VALUE	388,526

PERMIT NUM	DESCRIPTION	AMT	ISSUED
21007481	REPAIR/RRF	32,000	06/09/2021
B24239	ADDITION	23,969	12/01/2010
C16136	CO ISSUED	165,000	09/01/2005
B16136	NEW CONSTR	165,000	09/01/2005
R8277	REPAIR/RRF	5,000	09/01/2005

SALES DATA

OFF RECORD Number	DATE	TYPE INST	Q U	V I	RSN CD	SALE PRICE
2093/1197	12/29/2016	WD	Q	I	05	274,900
GRANTOR: HUNTER JAMIE M & KENN						
GRANTEE: ADAM CHRISTINA M &						
1339/1355	8/05/2005	WD	Q	V		45,500
GRANTOR: SELLERS MICHAEL E & R						
GRANTEE: HUNTER JAMIE M & KE						

BUILDING NOTES

BUILDING DIMENSIONS

BAS=[YR=2006] W41 BAS=[YR=2010] N6 W13 UOP=[YR=2010] W8 S10 E8 N10$ S10 E12 N4 E1$ W1 S4 W20 FGR=[YR=2006] W23 S34 E23 N11 FST=[YR=2006] E7 N6 W7 S6$ N23$ S17 E7 S20 E14 N2 FOP=[YR=2006] E26 N6 W26 S6$ N6 E26 S8 E15 N41$.

EXTRA FEATURES

LN	OB/XF CODE	DESCRIPTION	BLD	CAP	L	W	UNITS	UT	Adj R	ADJ UNIT PRICE	ORIG COND	YEAR ON	YEAR ACTUAL	Q	% COND	OB/XF MKT VALUE	NOTES
1	0500	FP-PRE FAB	0	0	0	0	1.00	UT	3,500.00	3,500.00	100	2006	2006	3	90	3,150	
2	0812	CONCRETE C	0	0	0	0	1,483.00	SF	4.00	4.00	100	2006	2006	3	87	5,161	
3	1127	BRICK 8"	0	0	16	0	64.00	SF	5.50	5.50	100	2006	2006	3	96	338	
4	0510	GARAGE WD-	0	0	20	30	600.00	SF	35.00	35.00	100	2011	2011	3	64	13,440	
5	0810	CONCRETE A	0	0	0	0	278.00	SF	6.50	6.50	100	2011	2011	3	92	1,662	
6	0476	VF 6 SBPL	0	0	0	0	126.00	LF	32.00	32.00	100	2011	2011	3	81	3,266	

LAND DESCRIPTION

TOTAL OB/XF 27,017

LN	USE CODE	CLS	LAND USE DESCRIPTION	CAP	RD	LOC ZONE	FRONT	DEPTH	TOT LND UTS	UNIT TYPE	DT	DPTH FACT	% COND	TOT ADJ	UNIT PRICE	ADJ UNIT PRICE	LAND VALUE	OTHER ADJUSTMENTS AND NOTES	YEAR	DENSITY	DECL	FRZ	YR	CONSRV
1	000100	C	SFR	0		RSF-1	0.00	0.00	1.00	LT		1.00	1.00	1.00	45,000.00	45,000.00	45,000							

REVIEW DATE 10/18/2021 BY KB Total Acres: 0.00 Total Land Value: 45,000 Market: 0 Agricultural: 0 Common: 45,000 PRINTED 08/06/2024 BY SYS