PT OR SW1/4 OF SEC 12-2N-24E
IN OR 753/1173
ESMT OR 1561/423

MCCOY TIM JR
451416 OLD DIXIE HWY
CALLAHAN, FL 32011

2024

12-2N-24-0000-0006-0040

NASSAU COUNTY PROPERTY

BUILDING CHARACTERISTICS

ELEMENT	CD	CONSTRUCTION
Exterior Wall	20	FACE BRICK 100
Roof Structur	03	GABLE/HIP 100
Roof Cover	03	COMP SHNGL 100
Interior Wall		N/A 100
Interior Floo	02	MIN PLYWD 50
Interior Floo	03	CONC FINSH 50
Air Condition	99	N/A 100
Heating Type		N/A 100
Bedrooms		0 100
Bathrooms		0 100
Frame	02	WOOD FRAME 100
Stories	0	0 100
Units		0 100
Occupancy	00	NONE 100
Quality	06	Quality Level 06

DOR CODE 0100 SINGLE FAMILY
MAP NUM | MKT AREA 08
NEIGHBORHOOD/LOC 8001.00

AREA TYPE	TOTAL GROSS AREA	PCT OF BASE	TOT ADJ AREA	SUBAREA MARKET VALUE
BAS	750	100	750	23,054
BAS	780	100	780	23,976
FOP	30	30	9	276
UUS	750	50	375	11,526
TOTALS	2,310		1,914	58,832

MARKET ADJUSTMENTS

TYPE	MDL	EFF. AREA	TOT ADJ PTS	EFF. BASE RATE	REPL. COST NEW	AYB	EYB	ECON	FNCT	PD	NORM	% COND
6500	01	1,914	59.7310	20.91	40,022	2011	2011	0	0	147	14.00	147.00

1 GARAGE RES – 100% - 2016 Heated Area: 1530 HX Base Yr 2016

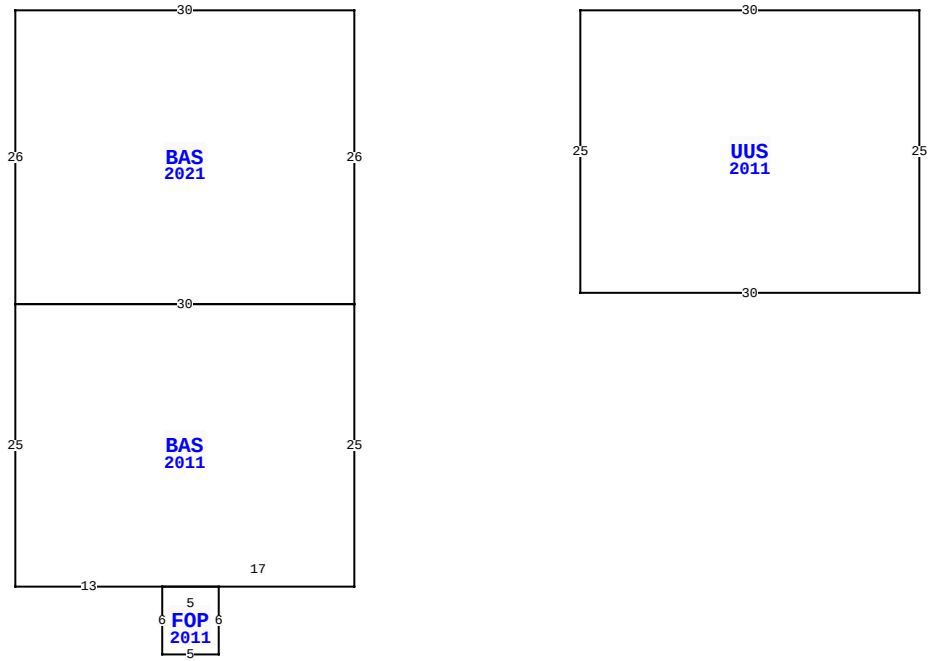

451416 OLD DIXIE HWY, CALLAHAN

BLD DATE		LGL DATE	
XF DATE		LAND DATE	05/18/2023 MLU
INC DATE		AG DATE	

NASSAU COUNTY PROPERTY — VALUATION SUMMARY

VALUATION BY		STANDARD
Tax Group: 6	Tax Dist:	
BUILDING MARKET VALUE		765,986
TOTAL MARKET OB/XF VALUE		37,024
TOTAL LAND VALUE - MARKET		59,472
TOTAL MARKET VALUE		862,482
SOH/AGL Deduction		270,636
ASSESSED VALUE		591,846
TOTAL EXEMPTION VALUE	HX HB	50,000
BASE TAXABLE VALUE		541,846
TOTAL JUST VALUE		862,482
NCON VALUE		0
INCOME VALUE		
PREVIOUS YEAR MKT VALUE		832,572

PERMIT NUM	DESCRIPTION	AMT	ISSUED
M15536	H/AC	0	07/01/2010
E22323	ELEC OTHER	0	12/01/2009
B22708	GARAGE	24,948	07/01/2009
E20819	ELEC OTHER	0	05/01/2008
P12865	OTHER	0	11/01/2007
R09945	REPAIR/RRF	15,000	12/01/2006

SALES DATA

OFF RECORD Number	DATE	TYPE INST	Q U	V I	RSN CD	SALE PRICE
0753/1173	3/08/1996	TD	Q	V		27,000

GRANTOR: LASSITER WM H JR TRUS
GRANTEE: MCCOY TIM JR

BUILDING NOTES

BUILDING DIMENSIONS

BAS=[YR=2021] W30 S26 BAS=[YR=2011] S25 E13 FOP=[YR=2011] S6 E5 N6 W5$ E17 N25 W30$ E30 N26$ PTR=E20 UUS=[YR=2011] E30 S25 W30 N25$ W20$.

EXTRA FEATURES

LN	OB/XF CODE	DESCRIPTION	BLD	CAP	L	W	UNITS	UT	Adj R	ADJ UNIT PRICE	ORIG COND	YEAR ON	YEAR ACTUAL	Q	% COND	OB/XF MKT VALUE	NOTES
1	1127	BRICK 8"	0	100	40	4	160.00	SF	11.00	11.00	100	2013	2013	3	98	1,725	
2	0810	CONCRETE A	0	100	0	0	98.00	SF	6.50	6.50	100	2013	2013	3	94	599	
3	0504	FP-ELECTRI	0	100	0	0	1.00	UT	2,000.00	2,000.00	100	2013	2013	3	96	1,920	
4	0812	CONCRETE C	0	100	0	0	6,296.00	SF	4.00	4.00	100	2014	2014	3	95	23,925	
5	0812	CONCRETE C	0	100	0	0	2,236.00	SF	4.00	4.00	100	2020	2020	3	99	8,855	

LAND DESCRIPTION

TOTAL OB/XF 37,024

LN	USE CODE	CLS	LAND USE DESCRIPTION	CAP	RD	LOC ZONE	FRONT	DEPTH	TOT LND UTS	UNIT TYPE	DT	DPTH FACT	% COND	TOT ADJ	UNIT PRICE	ADJ UNIT PRICE	LAND VALUE	OTHER ADJUSTMENTS AND NOTES	YEAR	DENSITY	DECL	FRZ	YR	CONSRV
1	000115	C	SFR ACRES	100	0006	OR	0.00	0.00	4.72	AC		1.00	1.00	0.70	18,000.00	12,600.00	59,472							

REVIEW DATE 07/21/2021 BY TWA Total Acres: 4.72 Total Land Value: 59,472 Market: 0 Agricultural: 0 Common: 59,472 PRINTED 08/06/2024 BY SYS

PT OR SW1/4 OF SEC 12-2N-24E
IN OR 753/1173
ESMT OR 1561/423

MCCOY TIM JR
451416 OLD DIXIE HWY
CALLAHAN, FL 32011

2024

12-2N-24-0000-0006-0040

BUILDING CHARACTERISTICS

ELEMENT	CD	CONSTRUCTION
Exterior Wall	20	FACE BRICK 100
Roof Structur	08	IRREGULAR 100
Roof Cover	03	COMP SHNGL 100
Interior Wall	05	DRYWALL 100
Interior Floo	11	CLAY TILE 100
Air Condition	03	CENTRAL 100
Heating Type	04	AIR DUCTED 100
Bedrooms		3 100
Bathrooms		3.5 100
Frame	02	WOOD FRAME 100
Stories	0	0 100
Units		0 100
Occupancy	00	NONE 100
Quality	02	Quality Level 02

DOR CODE 0100 SINGLE FAMILY
MAP NUM | MKT AREA 08
NEIGHBORHOOD/LOC 8001.00

AREA TYPE	TOTAL GROSS AREA	PCT OF BASE	TOT ADJ AREA	SUBAREA MARKET VALUE
BAS	3,983	100	3,983	498,778
FGR	1,130	55	622	77,891
FOP	60	30	18	2,254
FOP	200	30	60	7,514
FST	290	55	160	20,036
FUS	790	100	790	98,929
PTO	104	5	5	626
PTO	180	5	9	1,127
TOTALS	6,737		5,647	707,154

MARKET ADJUSTMENTS

TYPE	MDL	EFF. AREA	TOT ADJ PTS	EFF. BASE RATE	REPL. COST NEW	AYB	EYB	ECON	FNCT		NORM	% COND
0900	01	5,647	108.3000	135.38	764,491	2013	2013	0	0	0	7.50	92.50

2 SNGL FAM – 100% - 2016 Heated Area: 4773 HX Base Yr 2016

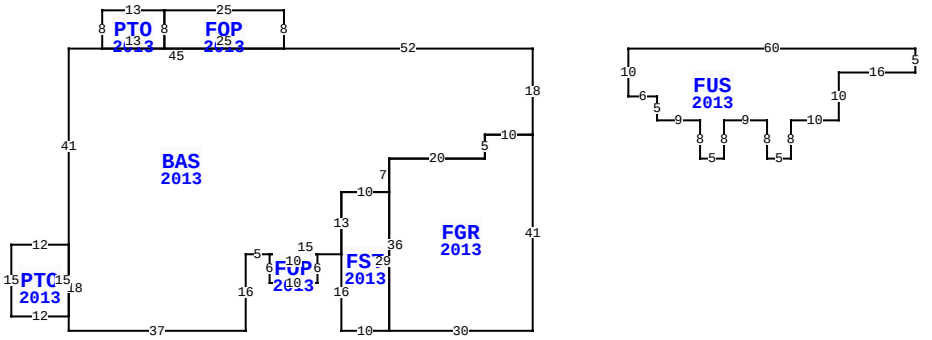

451416 OLD DIXIE HWY, CALLAHAN

BLD DATE		LGL DATE	
XF DATE		LAND DATE	05/18/2023 MLU
INC DATE		AG DATE	

NASSAU COUNTY PROPERTY

PAGE 2 of 2 6

VALUATION SUMMARY

VALUATION BY		STANDARD
Tax Group: 6	Tax Dist:	
BUILDING MARKET VALUE		765,986
TOTAL MARKET OB/XF VALUE		37,024
TOTAL LAND VALUE - MARKET		59,472
TOTAL MARKET VALUE		862,482
SOH/AGL Deduction		270,636
ASSESSED VALUE		591,846
TOTAL EXEMPTION VALUE	HX HB	50,000
BASE TAXABLE VALUE		541,846
TOTAL JUST VALUE		862,482
NCON VALUE		0
INCOME VALUE		
PREVIOUS YEAR MKT VALUE		832,572

PERMIT NUM	DESCRIPTION	AMT	ISSUED
WE00470	OTHER	0	11/01/2006

SALES DATA

OFF RECORD Number	DATE	TYPE INST	Q U	V I	RSN CD	SALE PRICE
0753/1173	3/08/1996	TD	Q	V		27,000

GRANTOR: LASSITER WM H JR TRUS
GRANTEE: MCCOY TIM JR

BUILDING NOTES

BUILDING DIMENSIONS

BAS=[YR=2013] W52 FOP=[YR=2013] N8 W25 PTO=[YR=2013] W13 S8 E13 N8$ S8 E25$ W45 S41 PTO=[YR=2013] W12 S15 E12 N15$ S18 E37 N16 E5 FOP=[YR=2013] S6 E10 N6 W10$ E15 FST=[YR=2013] S16 E10 FGR=[YR=2013] E30 N41 W10 S5 W20 S36$ N29 W10 S13$ N13 E10 N7 E20 N5 E10 N18$ PTR=E20 FUS=[YR=2013] E60 S5 W16 S10 W10 S8 W5 N8 W9 S8 W5 N8 W9 N5 W6 N10 $ W20$.

EXTRA FEATURES

L N	OB/XF CODE	DESCRIPTION	BLD	CAP	L	W	UNITS	UT	Adj R	ADJ UNIT PRICE	ORIG COND	YEAR ON	YEAR ACTUAL	Q	% COND	OB/XF MKT VALUE	NOTES

LAND DESCRIPTION

TOTAL OB/XF 0

L N	USE CODE	CLS	LAND USE DESCRIPTION	CAP	R D	LOC ZONE	FRONT	DEPTH	TOT LND UTS	UNIT TYPE	D T	DPTH FACT	% COND	TOT ADJ	UNIT PRICE	ADJ UNIT PRICE	LAND VALUE	OTHER ADJUSTMENTS AND NOTES	YEAR	DENSITY	DECL	FRZ	YR	CONSRV

REVIEW DATE 07/21/2021 BY TWA Total Acres: 4.72 Total Land Value: 59,472 Market: 0 Agricultural: 0 Common: 59,472 PRINTED 08/06/2024 BY SYS